PRIMOPAL

STEPPER MOTORS

- Hybrid Stepper Motor
- PM stepper Motor
- Stepper Motor Drive

2021
2022 REV01

SHANGHAI PRIMOPAL PRECISION MOTOR CO., LTD.

PrimoPal Motor Co., Ltd. is a joint-venture manufacturing, engineering and trading company, located at the free-trade zone of Shanghai, China. PrimoPal specializes in development, production and selling of various high-quality and cost-effective precision motor and motion control products, including Hybrid stepper motors, PM stepper motors, Linear actuators, Close-loop stepper motors, Brushless DC motors, Brushless servo motors, AC servo motors, PM DC motors, AC induction motors, Synchronous motors, Gear motors, Stepper drives, Brushless DC drives, Hybrid servo drives, AC servo drives, Brushless servo drives, Brush servo drives, Encoders, Spur gearboxes, Planetary gearheads, Brakes, Power supplies, Accessories, and so on.

Since establishment, PrimoPal is committed to providing outstanding quality, economical solutions, impeccable support and after-sales service for every client. Our manufacturing bases are equipped with advanced quality testing devices, precise injection molding machines, auto high-speed punches, auto winding machines and other advanced manufacturing equipment. It makes us have the ability of continuously providing products with superior quality. Besides, we have an engineering team with many years of experience in motor design and application engineering. This ability of offering custom products often gives our customers the great benefit.

For PrimoPal, the customer is not only a buyer, but also a long-term business partner. We work not only to meet their expectations, but also to exceed them through continuous cycles of learning. We believe it is the key to a successful business relationship that understanding our customer's goals, delivering what our customers need and when they need it. To demonstrate our commitment to all our customers, PrimoPal has adopted "Bringing out the Best in Motion" as our official slogan, which means our ultimate goal is to become one of the world's top level companies in the industry of precision motor and motion control system. The pursuit of excellence encourages all PrimoPal employees to forge ahead into improving our business processes and increasing our management efficiency. We have no doubt that our endeavors enable us to maintain strong presence in the competitive market.

Now, let us help you find the right solution for your motor and motion control systems.

A

Hybrid Stepper Motor

A 1 2 Phase

NEMA 8 · 1.8° · PHB20Y Series 01
NEMA 10 · 1.8° · PHB25Y Series 02
NEMA 11 · 1.8° · PHB28Y Series 03
NEMA 14 · 1.8° · PHB35Y Series 04
NEMA 14 · 0.9° · PHB35W Series 05
NEMA 16 · 1.8° · PHB39Y Series 06
NEMA 16 · 0.9° · PHB39M Series 07
NEMA 17 · 3.6° · PHB42E Series 08
NEMA 17 · 1.8° · PHB42S Series 09
NEMA 17 · 0.9° · PHB42W Series 10
NEMA 23 · 1.8° · PHB57K Series 11
NEMA 23 · 1.8° · PHB57S Series 12-13
NEMA 23 · 0.9° · PHB57M Series 14
NEMA 24 · 1.8° · PHB60S Series 15
NEMA 34 · 1.8° · PHB86K Series 16
NEMA 34 · 1.8° · PHB86S Series 17-18
NEMA 42 · 1.8° · PHB110S Series 19

A 2 3 Phase

NEMA 17 · 3.75° · PHB42R Series 20
NEMA 17 · 1.2° · PHB42T Series 21
NEMA 23 · 1.2° · PHB57T Series 22
NEMA 24 · 1.2° · PHB60T Series 23
NEMA 42 · 1.2° · PHB110T Series 24

A 3 5 Phase

NEMA 16 · 0.36° · PHB39G Series 25
NEMA 24 · 0.72° · PHB60F Series 26
NEMA 34 · 0.72° · PHB86F Series 27

B

Hybrid Stepper Gear Motor

NEMA 8 · PHG20Y Series 30
NEMA 11 · PHG28Y Series 31
NEMA 14 · PHG35S Series 32
NEMA 17 · PHG42S Series 33
NEMA 17 · PHG42S Series 34
NEMA 23 · PHG57S Series 35
NEMA 24 · PHG60S Series 36
NEMA 34 · PHG86S Series 37

C

Hybrid Stepper Motor Linear Actuator

C 1 Hybrid Stepper Motor Lead Screw Linear Actuator

NEMA 8 · PHBL20 Series 43-45
NEMA 11 · PHBL28 Series 46-48
NEMA 14 · PHBL35 Series 49-53
NEMA 17 · PHBL42 Series 54-58
NEMA 23 · PHBL57 Series 59-63
NEMA 24 · PHBL60 Series 64-68
NEMA 34 · PHBL86 Series 69-70

C 2 Hybrid Stepper Motor Ball Screw Linear Actuator

NEMA 8 · PHBS20 Series 77-78
NEMA 11 · PHBS28 Series 79-81
NEMA 14 · PHBS35 Series 82-84
NEMA 17 · PHBS42 Series 85-87
NEMA 23 · PHBS57 Series 88-90

D

IP65 Rated Stepper Motor

NEMA 14 · PHP35S 94
NEMA 17 · PHP42S 95
NEMA 23 · PHP57S 96
NEMA 24 · PHP60S 97
NEMA 34 · PHP86S 98

E

Hollow Shaft Stepper Motor

NEMA 8 · PHH20Y Series 100
NEMA 11 · PHH28Y Series 101
NEMA 14 · PHH35S Series 102
NEMA 17 · PHH42S Series 103
NEMA 23 · PHH57S Series 104
NEMA 24 · PHH60S Series 105
NEMA 34 · PHH86S Series 106

F

Stepper Motor With Brake

NEMA 14 · PHB35S Series 108
NEMA 17 · PHB42S Series 109
NEMA 23 · PHB57S Series 110
NEMA 24 · PHB60S Series 111
NEMA 34 · PHB86S Series 112

G

Pancake Stepper Motor

PHB26K Series 114
PHB28S Series 115
PHB36D Series 116
PHB46S Series 117

H

PM Stepper Motor

Ø10mm Base Size · PPMS10 Series 120
Ø15mm Base Size · PPMS15 Series 121
Ø20mm Base Size · PPMS20 Series 122
Ø25mm Base Size · PPMS25 Series 123
Ø35mm Base Size · PPMS35 Series 124
Ø42mm Base Size · PPMS42 Series 125
Ø49mm Base Size · PPMS49 Series 126
Ø57mm Base Size · PPMS57 Series 127

I

Can-Stack Stepper Linear Actuator

Dia.20mm Base Size · PPML20 series 131-134
Dia.25mm Base Size · PPML25 series 135-138
Dia.36mm Base Size · PPML36 series 139-142

J

PM Stepper Gear Motor

Economy Type

Ø24mm Base Size · PPMG24N Series 145
Ø28mm Base Size · PPMG28N Series 146
Ø35mm Base Size · PPMG35N Series 147

High Performance Type

Ø15mm Base Size · PPMG15P Series 148
Ø25mm Base Size · PPMG25P Series 149-150
Ø35mm Base Size · PPMG35P Series 151-152
Ø42mm Base Size · PPMG42P Series 153-154

K

Stepper Motor Drive

Economy Type

PST4030 158
PST4042 159
PST5042 160
PST5056 161
PST8056 162
PST8072 163
PST8060AC 164
P3ST8082 165

High Performance Type

PSR5030 166
PSR5055 167
PSR8098 168

Contents

What is Stepper Motor

Stepper Motors provide precise position and speed control, without the need for feedback devices to sense position. The operation of stepper motors is controlled through electrical pulses that the drive converts to current fl owing through the windings of the motor. As the current is switched the motor rotates in precise steps of a fi xed angle. The motor and drive constitutes a low cost control system that is precise and simple to construct.

Applications

PrimoPal's PHB Series stepper motors are widely used in kinds of applications.
Typical ones are shown as follows.

- Automation and inspection
- Conveyor transfer
- Cut-to-length metal, plastic, fabric, etc.
- Industrial HVAC
- Material handling
- Medical equipment
- Office peripheral equipment
- Packaging systems
- Pick-and-place applications
- Printing systems
- Robotics
- Semiconductor manufacturing
- Many others

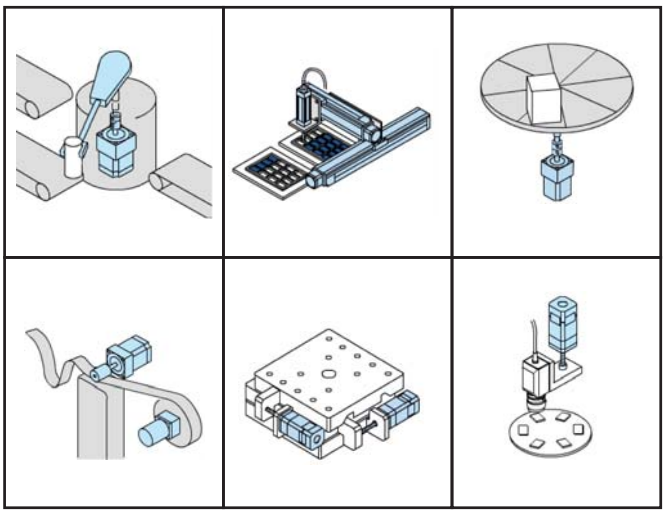

Basic Structure

Basic Structure

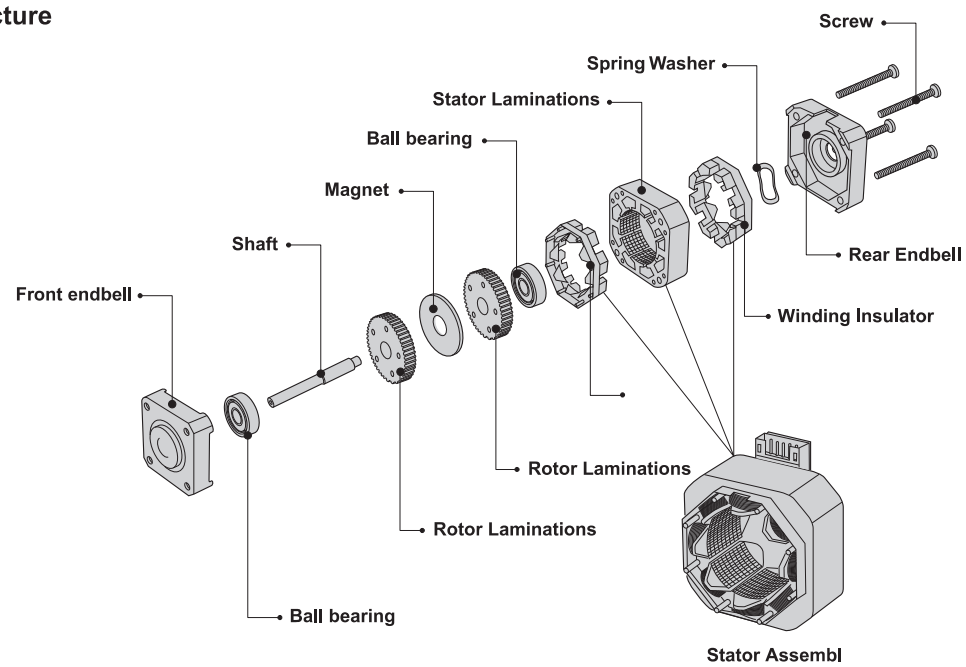

Performance Features of PrimoPal' Stepping Motors

PrimoPal specializes in offering 2-phase, 3-phase and 5-phase hybrid stepper motors, covering a wide range of applications with a frame size of NEMA 8 to 42. Made of high quality cold roll sheet copper and anti-high temperature permanent magnet, all of PrimoPal's hybrid stepper motors are a complete design of high reliability, high accuracy, and featuring low noise, low vibration, low motor heating and smooth run. Besides conventional solutions, custom housing and winding, shaft modification, as well as encoder, brake, gearbox adders are also available to optimize the product's performance for you needs.

· Accurate Position Control

The number of control pulses defi nes the motor shaft position. Position error is very small (less than1/10th of a degree), and non cumulative.

· Precise Motor Speed

Step motor running speed, is exactly determined by the frequency of the control pulses. Because the speed is very precise and easy to control, step motors are often used where coordinated motion control is needed.

· Forward & Reverse, Pause and Holding Function

Motor torque and position control is effective throughout the entire speed range, including zero speed holding torque. The zero speed holding torque locks the shaft at the desired position to hold the load in place.

· Low Speed Operation

Step motors produce a large amount of torque, and are easy to control, at low speeds. This often eliminates the need for speed reduction gearboxes, reduces costs and saves space.

· Long Life

The brushless design of step motors leads to motors with a very long life. Step motor life is usually determined by the life of the bearings.

Normal Selection Steps

You can follow the following steps to choose a stepping motor.

1. **Determining the Drive Mechanism Component**

Determine the mechanism and required specifications. First, determine certain features of the design, such as mechanism, rough dimensions, distances moved, and positioning period.

2. **Calculate the Required Resolution**

Find the resolution the motor requires. From the required resolution, determine whether a motor only or a geared motor is to be used. The resolution and positioning accuracy of a stepping motor system is affected by several factors the stepping angle, the selected drive mode (full-step, half-step or microstepping), and the gear rate.

3. **Determine the Operating Pattern**

Determine the operating pattern that fulfills the required specifications. Find the acceleration (deceleration) period and operating pulse speed in order to calculate the acceleration torque.

4. **Calculate the Required Torque**

Calculate the load torque and acceleration torque and find the required torque demanded by the motor.

Model Numbering System

PHB □□ □ □□ – □ □□ □□

a b c d e f g

a PrimoPal Hybrid Stepper Motor

b Frame Size

(O.D.in mm)

c Step Angle

Y: 1.8°, Square, small rotor
S: 1.8°, Square, middle/large rotor
K: 1.8°, round
M: 0.9°, Square
D: 0.9°, round
W: 0.9°, new design
E: 3.6°
T: 1.2°
R: 3.75°
F: 0.72°
G: 0.36°

d Motor Length

(Unit:mm)

e Lead Wires

3/4/5/6/8: Number of Lead Wires

f Electric Variation

Variety of current,torque etc

g Mechanicl Variation

Variety of shaft,lead wire etc

PHB20Y Series

Key Features

- Small Size
- Smooth Movement
- Low Inertia

Option

Step Angle	1.8°
Step Angle Accuracy	±5% (full step, no load)
Resistance Accuracy	±10%
Inductance Accuracy	±20%
Temperature Rise	80 °C Max.(rated current, 2 phase on)
Ambient Temperature	-20 °C ~ +50 °C
Insulation Resistance	100 MΩ Min., 500VDC
Dielectric Strength	500 VAC for one minute
Shaft Radial Play	0.02 Max. (450 g-load)
Shaft Axial Play	0.08 Max. (450 g-load)

Specifications

- Bi-polar

Series & Length	Model Number	Holding Torque		Rated Current	Resistance per phase	Inductance per phase	Detent Torque		Rotor Inertia	
		N.cm	oz-in	A	ohm	mH	N.cm	oz-in	g.cm²	oz-in²
PHB20Y28 28mm	PHB20Y28-402	1.4	1.96	0.2	23	8.2	0.2	0.28	2.5	0.014
	PHB20Y28-406	1.4	1.96	0.6	3.2	0.9	0.2	0.28	2.5	0.014
PHB20Y34 34mm	PHB20Y34-402	1.8	2.52	0.2	25	8.4	0.3	0.42	3.2	0.018
	PHB20Y34-406	1.8	2.52	0.6	4.5	1.2	0.3	0.42	3.2	0.018
PHB20Y40 40mm	PHB20Y40-402	2.4	3.36	0.2	32	8.8	0.5	0.7	4.5	0.025
	PHB20Y40-406	2.4	3.36	0.6	5.8	1.6	0.5	0.7	4.5	0.025

Mechanical Dimension

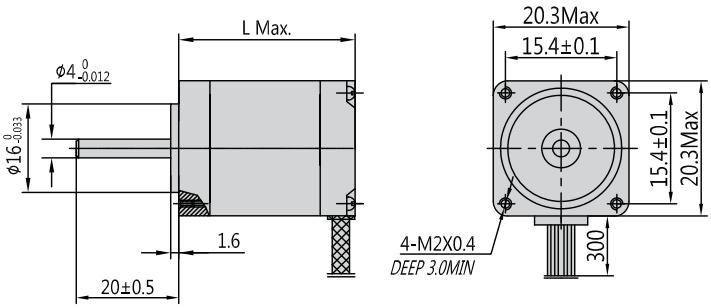

Series	L	Mass
	mm (in.)	g (lb.)
PHB20Y28	28 (1.10)	50 (0.11)
PHB20Y34	34 (1.33)	70 (0.15)
PHB20Y40	40 (1.57)	82 (0.18)

PHB25Y Series

Key Features

- Small Size
- Smooth Movement
- Low Inertia

Option

Step Angle	1.8°
Step Angle Accuracy	±5% (full step, no load)
Resistance Accuracy	±10%
Inductance Accuracy	±20%
Temperature Rise	80 °C Max.(rated current, 2 phase on)
Ambient Temperature	-20 °C ~ +50 °C
Insulation Resistance	100 MΩ Min., 500VDC
Dielectric Strength	500 VAC for one minute
Shaft Radial Play	0.02 Max. (450 g-load)
Shaft Axial Play	0.08 Max. (450 g-load)

Specifications

- Bi-polar

Series & Length	Model Number	Holding Torque		Rated Current	Resistance per phase	Inductance per phase	Lead Wire	Rotor Inertia	
		N.cm	oz-in	A	ohm	mH	(No.)	$g.cm^2$	$oz\text{-}in^2$
PHB25Y33 33mm	PHB25Y33-401	5.0	7.0	0.67	5.5	3.2	4	8	0.044
	PHB25Y33-402	5.0	7.0	0.35	15	9.2	4	8	0.044
PHB25Y41 41mm	PHB25Y41-401	6.0	8.4	0.67	7.0	6.0	4	11	0.061
	PHB25Y41-402	6.0	8.4	0.35	20	15	4	11	0.061
PHB25Y50 50mm	PHB25Y50-401	8.0	11.2	0.67	9.0	7.2	4	13	0.072
	PHB25Y50-402	8.0	11.2	0.35	24	18.5	4	13	0.072

Mechanical Dimension

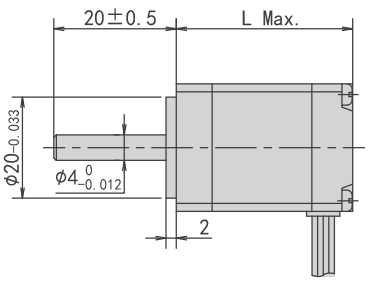

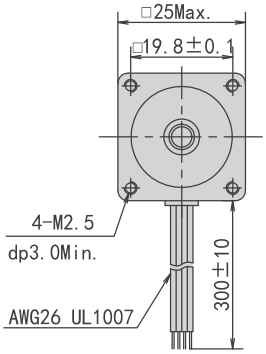

Series	L	Mass
	mm (in.)	g (lb.)
PHB25Y33	33 (1.30)	110 (0.24)
PHB25Y41	41 (1.61)	140 (0.31)
PHB25Y50	50 (1.97)	180 (0.40)

PHB28Y Series

Key Features

- Small Size
- Smooth Movement
- Low Inertia

Option

Step Angle	1.8°
Step Angle Accuracy	±5% (full step, no load)
Resistance Accuracy	±10%
Inductance Accuracy	±20%
Temperature Rise	80 °C Max.(rated current, 2 phase on)
Ambient Temperature	-20 °C ~ +50 °C
Insulation Resistance	100 MΩ Min., 500VDC
Dielectric Strength	500 VAC for one minute
Shaft Radial Play	0.02 Max. (450 g-load)
Shaft Axial Play	0.08 Max. (450 g-load)

Specifications

- Bi-polar

Series & Length	Model Number	Holding Torque		Rated Current	Resistance per phase	Inductance per phase	Detent Torque		Rotor Inertia	
		N.cm	oz-in	A	ohm	mH	N.cm	oz-in	g.cm²	oz-in²
PHB28Y28 28mm	PHB28Y28-401	4.5	6.3	0.6	4.2	2.2	0.3	0.42	6	0.033
	PHB28Y28-402	4.5	6.3	0.35	12	5.8	0.3	0.42	6	0.033
PHB28Y33 33mm	PHB28Y33-401	6.0	8.4	0.6	5.5	3.2	0.4	0.56	8	0.044
	PHB28Y33-402	6.0	8.4	0.35	15	9.2	0.4	0.56	8	0.044
PHB28Y41 41mm	PHB28Y41-401	8.0	11.2	0.6	7.0	6.0	0.5	0.7	11	0.061
	PHB28Y41-402	8.0	11.2	0.35	20	15	0.5	0.7	11	0.061
PHB28Y50 50mm	PHB28Y50-401	10	14	0.6	9.0	7.2	0.8	1.12	13	0.072
	PHB28Y50-402	10	14	0.35	24	18.5	0.8	1.12	13	0.072

Mechanical Dimension

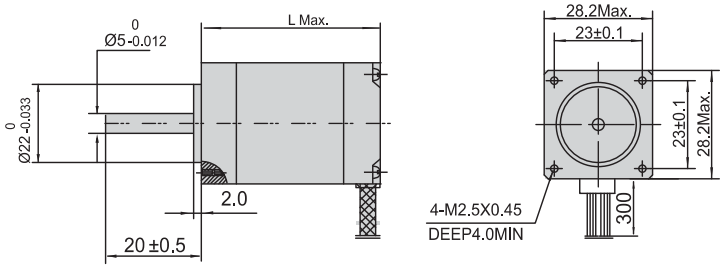

Series	L	Mass
	mm (in.)	g (lb.)
PHB28Y28	28 (1.10)	95 (0.19)
PHB28Y33	33 (1.29)	110 (0.24)
PHB28Y41	41 (1.61)	140 (0.30)
PHB28Y50	50 (1.96)	180 (0.39)

PHB35Y Series

Key Features

- Small Size
- High Speed
- High Acceleration

Option

Step Angle	1.8°
Step Angle Accuracy	±5% (full step, no load)
Resistance Accuracy	±10%
Inductance Accuracy	±20%
Temperature Rise	80 °C Max.(rated current, 2 phase on)
Ambient Temperature	-20 °C ~ +50 °C
Insulation Resistance	100 MΩ Min., 500VDC
Dielectric Strength	500 VAC for one minute
Shaft Radial Play	0.02 Max. (450 g-load)
Shaft Axial Play	0.08 Max. (450 g-load)

Specifications

- Bi-polar

Series & Length	Model Number	Holding Torque		Rated Current	Resistance per phase	Inductance per phase	Detent Torque		Rotor Inertia	
		N.cm	oz-in	A	ohm	mH	N.cm	oz-in	$g.cm^2$	$oz\text{-}in^2$
PHB35Y20 20mm	PHB35Y20-404	5	7	0.4	22	16	0.5	0.7	9	0.050
PHB35Y28 28mm	PHB35Y28-401	12	16.8	0.46	20	14	0.8	0.84	11	0.061
	PHB35Y28-402	12	16.8	0.8	5.0	5.0	0.8	0.84	11	0.061
PHB35Y34 34mm	PHB35Y34-401	18	25.2	0.42	25	32	1.0	1.4	13	0.072
	PHB35Y34-402	18	25.2	0.8	6.5	9.8	1.0	1.4	13	0.072
PHB35Y42 42mm	PHB35Y42-402	22	30.8	0.8	10.5	13	1.5	2.1	22	0.121
PHB35Y52 52mm	PHB35Y52-415	30	42	1.5	3.5	7.6	2.0	2.8	26	0.143
	PHB35Y52-418	30	42	1.8	2.5	5.0	2.0	2.8	26	0.143

- Uni-polar

Series & Length	Model Number	Holding Torque		Rated Current	Resistance per phase	Inductance per phase	Detent Torque		Rotor Inertia	
		N.cm	oz-in	A	ohm	mH	N.cm	oz-in	$g.cm^2$	$oz\text{-}in^2$
PHB35Y28 28mm	PHB35Y28-630	9	12.6	0.4	30	11	0.8	0.84	11	0.061
PHB35Y34 34mm	PHB35Y34-630	12	16.8	0.4	30	22	1.0	1.4	13	0.072

Mechanical Dimension

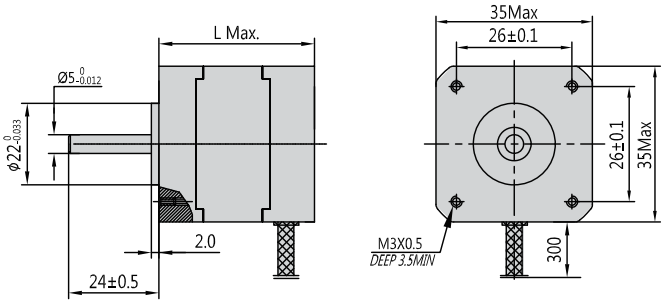

Series	L	Mass
	mm (in.)	g (lb.)
PHB35Y20	20 (0.79)	90 (0.20)
PHB35Y28	28 (1.10)	120 (0.26)
PHB35Y34	34 (1.34)	160 (0.35)
PHB35Y42	42 (1.65)	200 (0.44)
PHB35Y52	52 (2.05)	230 (0.51)

PHB35W Series

Key Features

- Smooth Movement
- High Acceleration
- Low Noise

Option

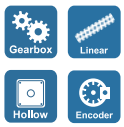

Step Angle	0.9°
Step Angle Accuracy	±5% (full step, no load)
Resistance Accuracy	±10%
Inductance Accuracy	±20%
Temperature Rise	80 °C Max.(rated current, 2 phase on)
Ambient Temperature	-20 °C ~ +50 °C
Insulation Resistance	100 MΩ Min., 500VDC
Dielectric Strength	500 VAC for one minute
Shaft Radial Play	0.02 Max. (450 g-load)
Shaft Axial Play	0.08 Max. (450 g-load)

Specifications

- Bi-polar

Series & Length	Model Number	Holding Torque		Rated Current	Resistance per phase	Inductance per phase	Detent Torque		Rotor Inertia	
		N.cm	oz-in	A	ohm	mH	N.cm	oz-in	g.cm²	oz-in²
PHB35W20 20mm	PHB35W20-404	5	7	0.4	24	18	0.2	0.28	10	0.055
PHB35W28 28mm	PHB35W28-405	9	12.6	0.55	10	9.5	0.3	0.42	12	0.066
	PHB35W28-408	9	12.6	0.8	4.5	4.5	0.3	0.42	12	0.066
PHB35W34 34mm	PHB35W34-402	14	19.6	0.55	12	19	0.6	0.84	18	0.099
	PHB35W34-403	14	19.6	0.8	6.0	10	0.6	0.84	18	0.099

- Uni-polar

Series & Length	Model Number	Holding Torque		Rated Current	Resistance per phase	Inductance per phase	Detent Torque		Rotor Inertia	
		N.cm	oz-in	A	ohm	mH	N.cm	oz-in	g.cm²	oz-in²
PHB35W28 28mm	PHB35W28-630	8	11.2	0.4	30	12	0.3	0.42	12	0.066
PHB35W34 34mm	PHB35W34-630	10	14	0.4	30	18	0.6	0.84	18	0.099

Mechanical Dimension

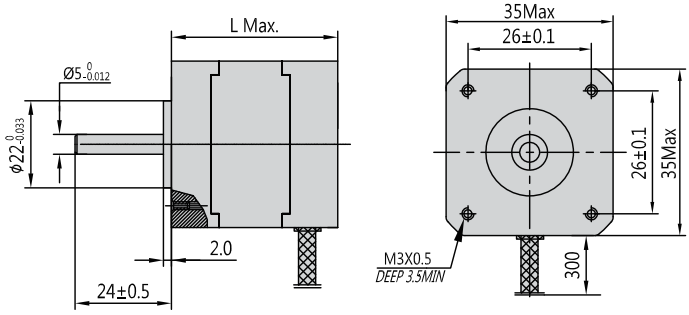

Series	L	Mass
	mm (in.)	g (lb.)
PHB35W20	20 (0.79)	120 (0.26)
PHB35W28	28 (1.10)	130 (0.29)
PHB35W34	34 (1.34)	190 (0.42)

PHB39Y Series

Key Features

- High Speed
- Small Size
- High Acceleration

Option

Step Angle	1.8°
Step Angle Accuracy	±5% (full step, no load)
Resistance Accuracy	±10%
Inductance Accuracy	±20%
Temperature Rise	80 °C Max.(rated current, 2 phase on)
Ambient Temperature	-20 °C ~ +50 °C
Insulation Resistance	100 MΩ Min., 500VDC
Dielectric Strength	500 VAC for one minute
Shaft Radial Play	0.02 Max. (450 g-load)
Shaft Axial Play	0.08 Max. (450 g-load)

Specifications

- Bi-polar

Series & Length	Model Number	Holding Torque		Rated Current	Resistance per phase	Inductance per phase	Detent Torque		Rotor Inertia	
		N.cm	oz-in	A	ohm	mH	N.cm	oz-in	g.cm²	oz-in²
PHB39Y20 20mm	PHB39Y20-401	8	11.2	0.42	18	12	0.5	0.7	12	0.066
PHB39Y26 26mm	PHB39Y26-401	14	19.6	0.6	9	10	0.8	1.12	14	0.077
PHB39Y34 34mm	PHB39Y34-401	18	25.2	0.6	12	13	1.0	1.4	19	0.105
	PHB39Y34-402	18	25.2	1.2	3.2	3.0	1.0	1.4	19	0.105
PHB39Y40 40mm	PHB39Y40-401	24	33.6	0.6	12	20	1.2	1.68	24	0.132
	PHB39Y40-402	24	33.6	1.2	3.8	6.5	1.2	1.68	24	0.132

- Uni-polar

Series & Length	Model Number	Holding Torque		Rated Current	Resistance per phase	Inductance per phase	Detent Torque		Rotor Inertia	
		N.cm	oz-in	A	ohm	mH	N.cm	oz-in	g.cm²	oz-in²
PHB39Y34 34mm	PHB39Y34-630	12	16.8	0.4	30	14	1.0	1.4	19	0.105
PHB39Y40 40mm	PHB39Y40-630	18	25.2	0.4	30	22	1.2	1.68	24	0.132

Mechanical Dimension

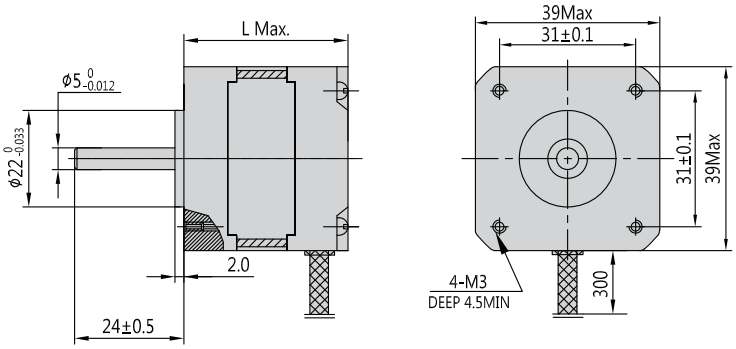

Series	L	Mass
	mm (in.)	g (lb.)
PHB39Y20	20 (1.10)	100 (0.19)
PHB39Y26	26 (1.29)	120 (0.24)
PHB39Y34	34 (1.61)	160 (0.30)
PHB39Y40	40 (1.96)	210 (0.39)

PHB39M Series

Key Features

- Low Noise
- Small Size
- Smooth Movement

Option

Gearbox Hollow Encoder

Step Angle	0.9°
Step Angle Accuracy	±5% (full step, no load)
Resistance Accuracy	±10%
Inductance Accuracy	±20%
Temperature Rise	80 °C Max.(rated current, 2 phase on)
Ambient Temperature	-20 °C ~ +50 °C
Insulation Resistance	100 MΩ Min., 500VDC
Dielectric Strength	500 VAC for one minute
Shaft Radial Play	0.02 Max. (450 g-load)
Shaft Axial Play	0.08 Max. (450 g-load)

Specifications

- Bi-polar

Series & Length	Model Number	Holding Torque		Rated Current	Resistance per phase	Inductance per phase	Detent Torque		Rotor Inertia	
		N.cm	oz-in	A	ohm	mH	N.cm	oz-in	g.cm²	oz-in²
PHB39M20 20mm	PHB39M20-401	8	11.2	0.42	20	16	0.5	0.7	15	0.083
PHB39M26 26mm	PHB39M26-401	14	19.6	0.6	9	16	0.8	1.12	18	0.099
PHB39M34 34mm	PHB39M34-401	16	22.4	0.6	9	15	1.1	1.54	23	0.127
	PHB39M34-402	16	22.4	1.2	2.5	3.6	1.1	1.54	23	0.127
PHB39M40 40mm	PHB39M40-401	22	30.8	0.6	12	20	1.4	1.96	30	0.165
	PHB39M40-402	22	30.8	1.2	3.2	5.5	1.4	1.96	30	0.165

- Uni-polar

Series & Length	Model Number	Holding Torque		Rated Current	Resistance per phase	Inductance per phase	Detent Torque		Rotor Inertia	
		N.cm	oz-in	A	ohm	mH	N.cm	oz-in	g.cm²	oz-in²
PHB39M34 34mm	PHB39M34-630	12	16.8	0.4	30	16	1.1	1.54	23	0.127
PHB39M40 40mm	PHB39M40-630	18	25.2	0.4	30	26	1.4	1.96	30	0.165

Mechanical Dimension

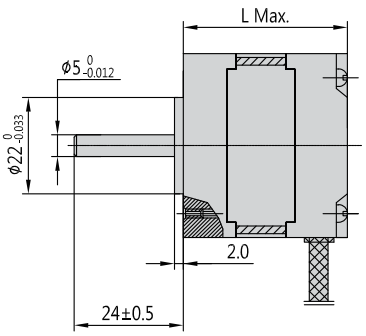

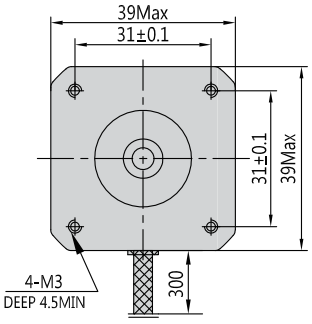

Series	L	Mass
	mm (in.)	g (lb.)
PHB39M20	20 (1.10)	100 (0.19)
PHB39M26	26 (1.29)	120 (0.24)
PHB39M34	34 (1.61)	160 (0.30)
PHB39M40	40 (1.96)	210 (0.39)

PHB42E Series

Key Features

- Small Size
- High Speed
- Low Inertia

Option

Gearbox Linear Hollow

Step Angle	3.6°
Step Angle Accuracy	±5% (full step, no load)
Resistance Accuracy	±10%
Inductance Accuracy	±20%
Temperature Rise	80 °C Max.(rated current, 2 phase on)
Ambient Temperature	-20 °C ~ +50 °C
Insulation Resistance	100 MΩ Min., 500VDC
Dielectric Strength	500 VAC for one minute
Shaft Radial Play	0.02 Max. (450 g-load)
Shaft Axial Play	0.08 Max. (450 g-load)

Specifications

- Bi-polar

Series & Length	Model Number	Holding Torque		Rated Current	Resistance per phase	Inductance per phase	Detent Torque		Rotor Inertia	
		N.cm	oz-in	A	ohm	mH	N.cm	oz-in	g.cm²	oz-in²
PHB42E34 34mm	PHB42E34-401	12	16.8	0.52	12	13.5	1.6	1.6	34	0.187

- Uni-polar

Series & Length	Model Number	Holding Torque		Rated Current	Resistance per phase	Inductance per phase	Detent Torque		Rotor Inertia	
		N.cm	oz-in	A	ohm	mH	N.cm	oz-in	g.cm²	oz-in²
PHB42E34 34mm	PHB42E34-602	8.5	11.9	0.6	10.5	4.5	1.6	2.24	34	0.187
	PHB42E34-616	8	11.2	0.16	75	28	1.6	2.24	34	0.187
PHB42E40 40mm	PHB42E34-616	9.5	13.3	0.25	45	22	1.6	2.24	54	0.297

Mechanical Dimension

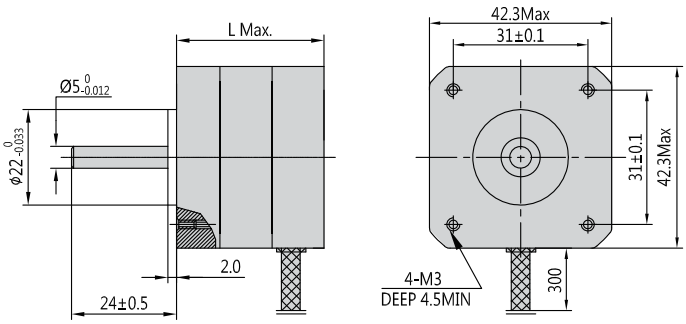

Series	L	Mass
	mm (in.)	g (lb.)
PHB42E34	34 (1.34)	220 (0.49)
PHB42E40	40 (1.57)	280 (0.62)

PHB42S Series

Key Features

- High accuracy
- High Torque
- Low Inertia

Option

Step Angle	1.8°
Step Angle Accuracy	±5% (full step, no load)
Resistance Accuracy	±10%
Inductance Accuracy	±20%
Temperature Rise	80 °C Max.(rated current, 2 phase on)
Ambient Temperature	-20 °C ~ +50 °C
Insulation Resistance	100 MΩ Min., 500VDC
Dielectric Strength	500 VAC for one minute
Shaft Radial Play	0.02 Max. (450 g-load)
Shaft Axial Play	0.08 Max. (450 g-load)

Specifications

- Bi-polar

Series & Length	Model Number	Holding Torque		Rated Current	Resistance per phase	Inductance per phase	Detent Torque		Rotor Inertia	
		N.cm	oz-in	A	ohm	mH	N.cm	oz-in	g.cm²	oz-in²
PHB42S20 20mm	PHB42S20-410	10	14	0.8	3.8	4.5	1.0	1.4	24	0.132
PHB42S28 28mm	PHB42S28-406	12	16.8	0.6	8.0	10	1.2	1.68	30	0.165
PHB42S34 34mm	PHB42S34-401	28	39.2	1.3	2.4	2.8	1.6	2.24	34	0.187
	PHB42S34-432	28	39.2	1.7	1.2	1.8	1.6	2.24	34	0.187
	PHB42S34-430	28	39.2	0.4	30	35	1.6	2.24	34	0.187
PHB42S40 40mm	PHB42S40-401	40	56	1.3	2.5	5.0	2.2	3.08	54	0.297
	PHB42S40-402	40	56	1.7	1.5	2.8	2.2	3.08	54	0.297
PHB42S48 48mm	PHB42S48-401	52	72.8	1.3	3.2	5.5	2.6	3.64	68	0.374
	PHB42S48-402	52	72.8	1.7	1.8	3.2	2.6	3.64	68	0.374
	PHB42S48-403	52	72.8	2.3	1.2	1.6	2.6	3.64	68	0.374
PHB42S60 60mm	PHB42S60-403	70	98	2.3	1.4	2.5	3.6	5.04	80	0.440
PHB42S63 63mm	PHB42S63-403	80	112	2.3	1.5	2.2	4.0	5.6	85	0.468

- Uni-polar

Series & Length	Model Number	Holding Torque		Rated Current	Resistance per phase	Inductance per phase	Detent Torque		Rotor Inertia	
		N.cm	oz-in	A	ohm	mH	N.cm	oz-in	g.cm²	oz-in²
PHB42S34 34mm	PHB42S34-630	21	29.4	0.4	30	18	1.6	2.24	34	0.187
PHB42S40 40mm	PHB42S40-601	28	39.2	1.2	3.2	2.8	2.2	3.08	54	0.297
	PHB42S40-630	28	39.2	0.4	30	28	2.2	3.08	54	0.297
PHB42S48 48mm	PHB42S48-630	34	47.6	0.4	30	38	2.6	3.64	68	0.374

Mechanical Dimension

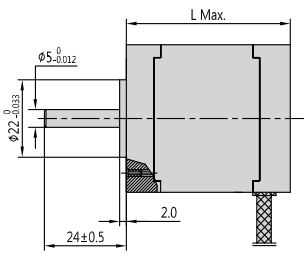

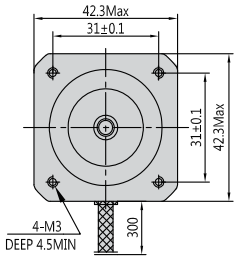

Series	L	Mass
	mm (in.)	g (lb.)
PHB42S20	20 (0.79)	120 (0.26)
PHB42S28	28 (1.10)	150 (0.33)
PHB42S34	34 (1.34)	220 (0.49)
PHB42S40	40 (1.57)	280 (0.62)
PHB42S48	48 (1.89)	350 (0.77)
PHB42S60	60 (2.36)	480 (1.06)
PHB42S63	63 (2.48)	500 (1.10)

PHB42W Series

Key Features

- Small Size
- Smooth Movement
- Low Inertia

Option

Step Angle	0.9°
Step Angle Accuracy	±5% (full step, no load)
Resistance Accuracy	±10%
Inductance Accuracy	±20%
Temperature Rise	80 °C Max.(rated current, 2 phase on)
Ambient Temperature	-20 °C ~ +50 °C
Insulation Resistance	100 MΩ Min., 500VDC
Dielectric Strength	500 VAC for one minute
Shaft Radial Play	0.02 Max. (450 g-load)
Shaft Axial Play	0.08 Max. (450 g-load)

Specifications

- Bi-polar

Series & Length	Model Number	Holding Torque		Rated Current	Resistance per phase	Inductance per phase	Detent Torque		Rotor Inertia	
		N.cm	oz-in	A	ohm	mH	N.cm	oz-in	g.cm²	oz-in²
PHB42W21 21mm	PHB42W21-403	8	11.2	0.3	25	36	0.7	0.98	15	0.083
PHB42W28 28mm	PHB42W28-406	10	14	0.6	9	9	0.9	1.26	20	0.110
PHB42W34 34mm	PHB42W34-401	24	33.6	1.3	2.4	3.6	1.2	1.68	34	0.187
	PHB42W34-402	24	33.6	1.7	1.2	2.2	1.2	1.68	34	0.187
	PHB42W34-430	24	33.6	0.4	30	45	1.2	1.68	34	0.187
PHB42W40 40mm	PHB42W40-401	36	50.4	1.3	2.5	6.2	1.8	2.52	54	0.297
	PHB42W40-402	36	50.4	1.7	1.5	3.8	1.8	2.52	54	0.297
PHB42W48 48mm	PHB42W48-401	42	58.8	1.3	3.0	7.0	2.2	3.08	68	0.374
	PHB42W48-402	42	58.8	1.7	1.8	4.0	2.2	3.08	68	0.374
	PHB42W48-403	42	58.8	2.3	1.2	2.0	2.2	3.08	68	0.374

- Uni-polar

Series & Length	Model Number	Holding Torque		Rated Current	Resistance per phase	Inductance per phase	Detent Torque		Rotor Inertia	
		N.cm	oz-in	A	ohm	mH	N.cm	oz-in	g.cm²	oz-in²
PHB42W34 34mm	PHB42W34-630	20	28	0.4	30	22	1.2	1.68	34	0.187
PHB42W40 40mm	PHB42W40-601	26	36.4	1.2	3.2	3.8	1.8	2.52	54	0.297
	PHB42W40-630	26	36.4	0.4	30	34	1.8	2.52	54	0.297
PHB42W48 48mm	PHB42W48-630	27	37.8	0.4	30	28	2.2	3.08	68	0.374

Mechanical Dimension

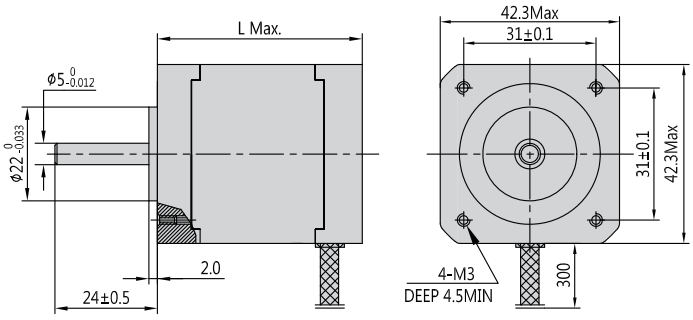

Series	L	Mass
	mm (in.)	g (lb.)
PHB42W21	21 (0.83)	120 (0.26)
PHB42W28	28 (1.10)	150 (0.33)
PHB42W34	34 (1.34)	220 (0.49)
PHB42W40	40 (1.57)	280 (0.62)
PHB42W48	48 (1.89)	350 (0.77)

PHB57K Series

Key Features

- High Acceleration
- Low Noise
- Low Inertia

Option

Gearbox Hollow Encoder

Step Angle	1.8°
Step Angle Accuracy	±5% (full step, no load)
Resistance Accuracy	±10%
Inductance Accuracy	±20%
Temperature Rise	80 °C Max.(rated current, 2 phase on)
Ambient Temperature	-20 °C ~ +50 °C
Insulation Resistance	100 MΩ Min., 500VDC
Dielectric Strength	500 VAC for one minute
Shaft Radial Play	0.02 Max. (450 g-load)
Shaft Axial Play	0.08 Max. (450 g-load)

Specifications

- Bi-polar

Series & Length	Model Number	Holding Torque		Rated Current	Resistance per phase	Inductance per phase	Detent Torque		Rotor Inertia	
		N.cm	oz-in	A	ohm	mH	N.cm	oz-in	g.cm²	oz-in²
PHB57K41 41mm	PHB57K41-401	22	30.8	1.55	1.8	3.5	3.5	4.9	60	0.330
	PHB57K41-402	32	44.8	2.1	0.8	1.4	3.5	4.9	60	0.330
PHB57K51 51mm	PHB57K51-401	62	86.8	1.4	2.5	6.2	5.5	7.7	118	0.649
	PHB57K51-402	62	86.8	2.0	1.3	3.2	5.5	7.7	118	0.649
PHB57K56 56mm	PHB57K56-401	80	112	2.5	1.2	3.0	6.5	9.1	145	0.798
PHB57K76 76mm	PHB57K76-402	110	154	4.2	0.6	1.4	9.5	13.3	230	1.265
	PHB57K76-403	110	154	2.1	2.2	6.2	9.5	13.3	230	1.265
	PHB57K76-404	110	154	3.6	0.8	2.2	9.5	13.3	230	1.265

- Uni-polar

Series & Length	Model Number	Holding Torque		Rated Current	Resistance per phase	Inductance per phase	Detent Torque		Rotor Inertia	
		N.cm	oz-in	A	ohm	mH	N.cm	oz-in	g.cm²	oz-in²
PHB57K41 41mm	PHB57K41-602	24	33.6	1.5	1.5	1.4	3.5	4.9	60	0.330
PHB57K51 51mm	PHB57K51-603	45	63	1.4	2.5	3.2	5.5	7.7	118	0.649
PHB57K56 56mm	PHB57K56-602	60	84	1.2	5.0	6.8	6.5	9.1	145	0.798
	PHB57K56-604	60	84	2.4	1.0	1.2	6.5	9.1	145	0.798

Mechanical Dimension

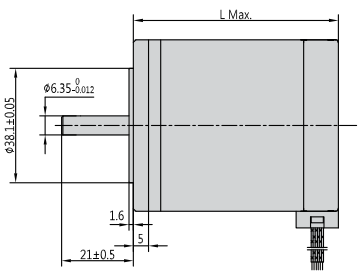

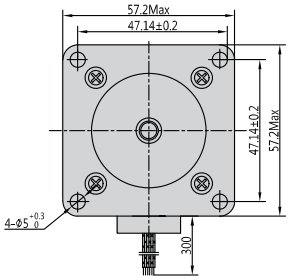

Series	L	Mass
	mm (in.)	g (lb.)
PHB57K41	41 (1.61)	450 (0.99)
PHB57K51	51 (1.29)	600 (1.32)
PHB57K56	56 (2.01)	650 (1.43)
PHB57K76	76 (2.95)	850 (1.87)

PHB57S Series

Key Features

- High Torque
- Smooth Movement
- High Speed

Option

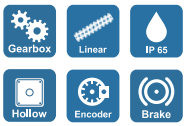

Step Angle	1.8°
Step Angle Accuracy	±5% (full step, no load)
Resistance Accuracy	±10%
Inductance Accuracy	±20%
Temperature Rise	80 °C Max.(rated current, 2 phase on)
Ambient Temperature	-20 °C ~ +50 °C
Insulation Resistance	100 MΩ Min., 500VDC
Dielectric Strength	500 VAC for one minute
Shaft Radial Play	0.02 Max. (450 g-load)
Shaft Axial Play	0.08 Max. (450 g-load)

Specifications

- Bi-polar

Series & Length	Model Number	Holding Torque		Rated Current	Resistance per phase	Inductance per phase	Detent Torque		Rotor Inertia	
		N.cm	oz-in	A	ohm	mH	N.cm	oz-in	$g.cm^2$	$oz\text{-}in^2$
PHB57S41 41mm	PHB57S41-412	55	77	0.62	12	24	2.5	3.5	150	0.825
	PHB57S41-420	55	77	2.0	1.2	2.5	2.5	3.5	150	0.825
PHB57S45 45mm	PHB57S45-406	80	112	0.62	12	26	2.8	3.92	190	1.045
	PHB57S45-425	80	112	2.5	1.0	2.2	2.8	3.92	190	1.045
PHB57S51 51mm	PHB57S51-406	90	126	0.62	13	2.8	3.0	4.2	230	1.265
	PHB57S51-425	90	126	2.5	1.2	3.2	3.0	4.2	230	1.265
PHB57S56 56mm	PHB57S56-425	110	154	2.5	1.3	4.2	3.5	4.9	280	1.540
	PHB57S56-430	110	154	3.0	0.8	2.4	3.5	4.9	280	1.540
	PHB57S56-404	110	154	4.2	0.4	1.2	3.5	4.9	280	1.540
PHB57S64 64mm	PHB57S64-425	150	210	2.5	1.5	4.5	5.0	7	380	2.090
	PHB57S64-430	150	210	3.0	0.8	2.3	5.0	7	380	2.090
	PHB57S64-404	150	210	4.2	0.55	1.2	5.0	7	380	2.090
PHB57S76 76mm	PHB57S76-430	180	252	3.0	1.0	3.5	6.0	8.4	440	2.420
	PHB57S76-404	180	252	4.2	0.6	1.8	6.0	8.4	440	2.420
PHB57S100 100mm	PHB57S100-430	250	350	3.0	1.4	5.5	10	14	680	3.740
	PHB57S100-404	250	350	4.2	0.8	3.0	10	14	680	3.740
PHB57S112 112mm	PHB57S112-430	280	392	3.0	1.6	6.8	12	16.8	800	4.400
	PHB57S112-404	280	392	4.2	0.9	3.8	12	16.8	800	4.400

PHB57S Series

- Uni-polar

Series & Length	Model Number	Holding Torque		Rated Current	Resistance per phase	Inductance per phase	Detent Torque		Rotor Inertia	
		N.cm	oz-in	A	ohm	mH	N.cm	oz-in	g.cm²	oz-in²
PHB57S41 41mm	PHB57S41-601	40	56	1.0	5.2	5.5	2.8	3.92	150	0.825
PHB57S51 51mm	PHB57S51-601	70	98	0.8	6.8	9.2	3.0	4.2	230	1.265
PHB57S56 56mm	PHB57S56-601	90	126	1.5	3.2	5.5	3.5	4.9	280	1.540
PHB57S76 76mm	PHB57S76-601	140	196	1.5	4.5	7.8	6.0	8.4	440	2.420

Mechanical Dimension

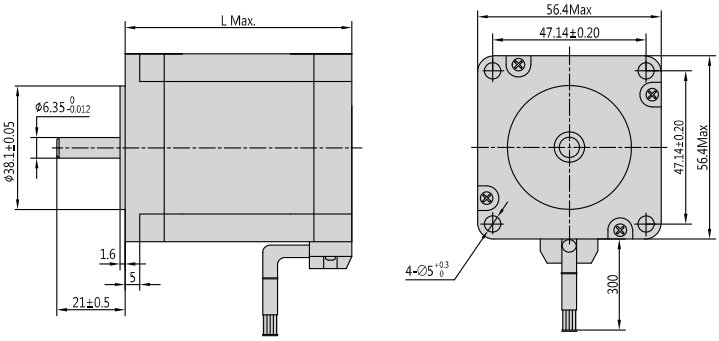

Series	L	Mass
	mm (in.)	g (lb.)
PHB57S41	41 (1.61)	470 (1.04)
PHB57S45	45 (1.77)	520 (1.14)
PHB57S51	51 (2.01)	590 (1.30)
PHB57S56	56 (2.20)	680 (1.50)
PHB57S64	64 (2.52)	850 (1.87)
PHB57S76	76 (2.99)	1050 (2.31)
PHB57S100	100 (3.94)	1250 (2.75)
PHB57S112	112 (4.41)	1400 (3.08)

PHB57M Series

Key Features

- Smooth Movement
- High Torque
- Low Speed

Option

Step Angle	0.9°
Step Angle Accuracy	±5% (full step, no load)
Resistance Accuracy	±10%
Inductance Accuracy	±20%
Temperature Rise	80 °C Max.(rated current, 2 phase on)
Ambient Temperature	-20 °C ~ +50 °C
Insulation Resistance	100 MΩ Min., 500VDC
Dielectric Strength	500 VAC for one minute
Shaft Radial Play	0.02 Max. (450 g-load)
Shaft Axial Play	0.08 Max. (450 g-load)

Specifications

- Bi-polar

Series & Length	Model Number	Holding Torque		Rated Current	Resistance per phase	Inductance per phase	Detent Torque		Rotor Inertia	
		N.cm	oz-in	A	ohm	mH	N.cm	oz-in	$g.cm^2$	$oz\text{-}in^2$
PHB57M41 41mm	PHB57M41-420	32	44.8	2.0	1.2	3.0	2.5	3.5	470	2.585
PHB57M45 51mm	PHB57M45-425	62	86.8	2.5	1.0	3.0	2.8	3.92	520	2.860
PHB57M51 51mm	PHB57M51-425	70	98	2.5	1.2	3.8	3.0	4.2	590	3.245
PHB57M56 56mm	PHB57M56-425	100	140	2.5	1.3	5.2	3.5	4.9	680	3.740
	PHB57M56-430	100	140	3.0	0.8	2.8	3.5	4.9	680	3.740
	PHB57M56-404	100	140	4.2	0.4	1.5	3.5	4.9	680	3.740
PHB57M64 64mm	PHB57M64-430	110	154	3.0	0.9	3.0	5.0	7	850	4.675
	PHB57M64-404	110	154	4.2	0.55	1.5	5.0	7	850	4.675
PHB57M76 76mm	PHB57M76-430	150	210	3.0	1.0	4.3	6.0	8.4	1050	5.775
	PHB57M76-404	150	210	4.2	0.6	2.2	6.0	8.4	1050	5.775

Mechanical Dimension

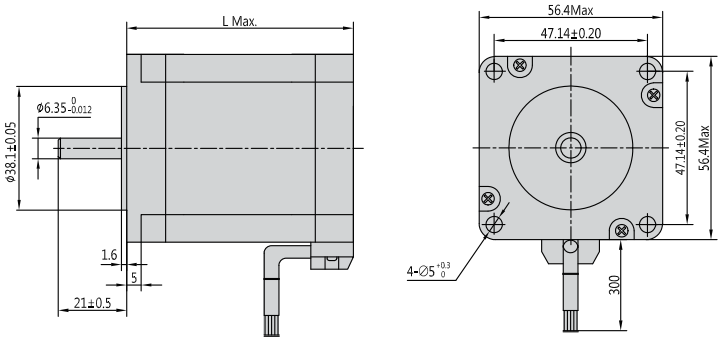

Series	L	Mass
	mm (in.)	g (lb.)
PHB57M41	41 (1.61)	470 (1.04)
PHB57M45	45 (1.77)	520 (1.14)
PHB57M51	51 (2.01)	590 (1.30)
PHB57M56	56 (2.20)	680 (1.50)
PHB57M64	64 (2.52)	850 (1.87)
PHB57M76	76 (2.99)	1050 (2.31)

PHB60S Series

Key Features

- High Torque
- Smooth Movement
- High Inertia

Option

Gearbox, Linear, IP 65, Hollow, Encoder, Brake

Step Angle	1.8°
Step Angle Accuracy	±5% (full step, no load)
Resistance Accuracy	±10%
Inductance Accuracy	±20%
Temperature Rise	80 °C Max.(rated current, 2 phase on)
Ambient Temperature	-20 °C ~ +50 °C
Insulation Resistance	100 MΩ Min., 500VDC
Dielectric Strength	500 VAC for one minute
Shaft Radial Play	0.02 Max. (450 g-load)
Shaft Axial Play	0.08 Max. (450 g-load)

Specifications

- Bi-polar

Series & Length	Model Number	Holding Torque		Rated Current	Resistance per phase	Inductance per phase	Detent Torque		Rotor Inertia	
		N.cm	oz-in	A	ohm	mH	N.cm	oz-in	g.cm²	oz-in²
PHB60S41 41mm	PHB60S41-420	64	89.6	2.0	1.2	2.5	3.0	4.2	180	0.990
PHB60S45 45mm	PHB60S45-425	85	119	2.5	1.0	2.2	3.5	4.9	200	1.100
PHB60S51 51mm	PHB60S51-425	140	196	2.5	1.2	3.2	4.0	5.6	250	1.375
PHB60S56 56mm	PHB60S56-430	160	224	3.0	0.8	2.4	4.0	5.6	350	1.925
	PHB60S56-404	160	224	4.2	0.4	1.2	4.0	5.6	350	1.925
PHB60S64 64mm	PHB60S64-430	180	252	3.0	0.8	2.3	5.0	7	450	2.475
	PHB60S64-404	180	252	4.2	0.55	1.2	5.0	7	450	2.475
PHB60S76 76mm	PHB60S76-430	220	308	3.0	1.0	3.5	7.0	9.8	550	3.025
	PHB60S76-404	220	308	4.2	0.6	1.8	7.0	9.8	550	3.025
PHB60S90 90mm	PHB60S90-430	260	364	3.0	1.4	5.5	12.0	16.8	780	4.290
	PHB60S90-404	260	364	4.2	0.8	3.0	12.0	16.8	780	4.290

Mechanical Dimension

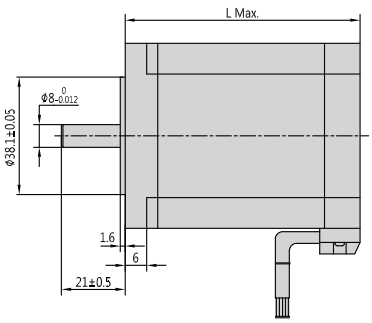

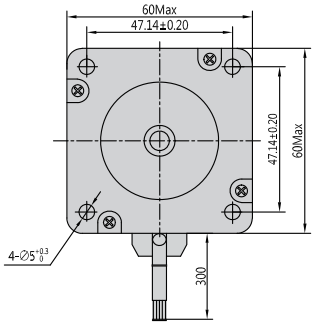

Series	L	Mass
	mm (in.)	g (lb.)
PHB60S41	41 (1.61)	500 (1.10)
PHB60S45	45 (1.77)	550 (1.21)
PHB60S51	51 (2.01)	600 (1.32)
PHB60S56	56 (2.20)	700 (1.54)
PHB60S64	64 (2.52)	950 (2.09)
PHB60S76	76 (2.99)	1150 (2.53)
PHB60S90	90 (3.54)	1400 (3.08)

PHB86K Series

Key Features

- High Acceleration
- Low Noise
- High Inertia

Option

Step Angle	1.8°
Step Angle Accuracy	±5% (full step, no load)
Resistance Accuracy	±10%
Inductance Accuracy	±20%
Temperature Rise	80 °C Max.(rated current)
Ambient Temperature	-20 °C ~ +50 °C
Insulation Resistance	100 MΩ Min., 500VDC
Dielectric Strength	1500 VAC for one minute
Shaft Radial Play	0.02 Max. (450 g-load)
Shaft Axial Play	0.08 Max. (450 g-load)

Specifications

- 8 wires

Model & Length	Model Number	Connection	Holding Torque		Rated Current	Resistance per phase	Inductance per phase	Detent Torque		Rotor Inertia	
			N.cm	oz-in	A	ohm	mH	N.cm	oz-in	g.cm²	oz-in²
PHB86K63 63mm	PHB86K63-801	Bipolar-Parallel	250	350	3.0	0.95	7.2	4.5	6.3	640	3.520
		Bipolar-Series	250	350	1.5	3.8	28.8				
	PHB86K63-803	Bipolar-Parallel	250	350	5.6	0.34	2.0	4.5	6.3	640	3.520
		Bipolar-Series	250	350	2.8	1.36	8.0				
	PHB86K63-804	Bipolar-Parallel	250	350	7.0	0.23	1.5	4.5	6.3	640	3.520
		Bipolar-Series	250	350	3.5	0.9	6.0				
PHB86K92 92mm	PHB86K92-801	Bipolar-Parallel	450	630	3.0	1.4	15	6.5	9.1	1300	7.150
		Bipolar-Series	450	630	1.5	5.4	60				
	PHB86K92-803	Bipolar-Parallel	450	630	5.6	0.45	3.8	6.5	9.1	1300	7.150
		Bipolar-Series	450	630	2.8	1.8	15.2				
	PHB86K92-804	Bipolar-Parallel	450	630	7.0	0.3	2.8	6.5	9.1	1300	7.150
		Bipolar-Series	450	630	3.5	1.2	11.2				
PHB86K-122 122mm	PHB86K122-802	Bipolar-Parallel	630	882	3.8	1.25	12.5	10.5	14.7	1900	10.45
		Bipolar-Series	630	882	1.9	5.0	50				
	PHB86K122-803	Bipolar-Parallel	630	882	5.6	0.55	5.6	10.5	14.7	1900	10.45
		Bipolar-Series	630	882	2.8	2.2	22.4				
	PHB86K122-804	Bipolar-Parallel	630	882	7.0	0.4	3.6	10.5	14.7	1900	10.45
		Bipolar-Series	630	882	3.5	1.6	14.4				

Mechanical Dimension

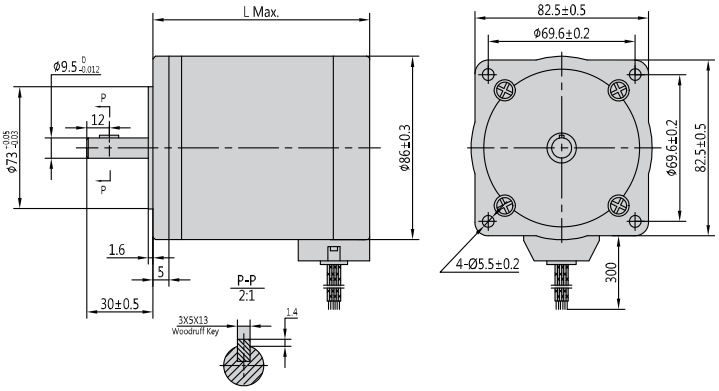

Series	L	Mass
	mm (in.)	g (lb.)
PHB86K63	63 (2.48)	1600 (3.52)
PHB86K92	92 (3.62)	2600 (5.72)
PHB86K122	122 (4.80)	3800 (8.36)

PHB86S Series

Key Features

- High Torque
- Smooth Movement
- High Accurrancy

Option

Step Angle	1.8°
Step Angle Accuracy	±5% (full step, no load)
Resistance Accuracy	±10%
Inductance Accuracy	±20%
Temperature Rise	80 °C Max.(rated current)
Ambient Temperature	-20 °C ~ +50 °C
Insulation Resistance	100 MΩ Min., 500VDC
Dielectric Strength	820 VAC for one minute
Shaft Radial Play	0.02 Max. (450 g-load)
Shaft Axial Play	0.08 Max. (450 g-load)

Specifications

- 8 wires

Model & Length	Model Number	Connection	Holding Torque		Rated Current	Resistance per phase	Inductance per phase	Detent Torque		Rotor Inertia	
			N.cm	oz-in	A	ohm	mH	N.cm	oz-in	g.cm²	oz-in²
PHB86S66 66mm	PHB86S66-801	Bipolar-Parallel	310	434	3.8	0.6	3.5	5.5	7.7	850	4.675
		Bipolar-Series	310	434	1.9	2.4	14.0				
	PHB86S66-802	Bipolar-Parallel	310	434	5.6	0.3	1.6	5.5	7.7	850	4.675
		Bipolar-Series	310	434	2.8	1.2	6.4				
	PHB86S66-803	Bipolar-Parallel	310	434	7.0	0.2	1.0	5.5	7.7	850	4.675
		Bipolar-Series	310	434	3.5	0.8	4.0				
PHB86S78 78mm	PHB86S78-801	Bipolar-Parallel	420	588	3.8	0.8	5.6	6.5	9.1	1050	5.775
		Bipolar-Series	420	588	1.9	3.2	22.4				
	PHB86S78-802	Bipolar-Parallel	420	588	5.6	0.35	3.0	6.5	9.1	1050	5.775
		Bipolar-Series	420	588	2.8	1.4	12.0				
	PHB86S78-803	Bipolar-Parallel	420	588	7.0	0.25	1.8	6.5	9.1	1050	5.775
		Bipolar-Series	420	588	3.5	1.0	7.2				
PHB86S98 92mm	PHB86S98-801	Bipolar-Parallel	650	910	3.8	0.95	8.6	9.5	13.3	1550	8.525
		Bipolar-Series	650	910	1.9	3.8	34.4				
	PHB86S98-802	Bipolar-Parallel	650	910	5.6	0.5	4.1	9.5	13.3	1550	8.525
		Bipolar-Series	650	910	2.8	2.0	16.4				
	PHB86S98-803	Bipolar-Parallel	650	910	7.0	0.32	2.4	9.5	13.3	1550	8.525
		Bipolar-Series	650	910	3.5	1.3	9.6				

PHB86S Series

Specifications

- 8 wires

Model & Length	Model Number	Connection	Holding Torque		Rated Current	Resistance per phase	Inductance per phase	Detent Torque		Rotor Inertia	
			N.cm	oz-in	A	ohm	mH	N.cm	oz-in	g.cm²	oz-in²
PHB86S114 114mm	PHB86S114-801	Bipolar-Parallel	820	1148	3.8	1.0	11.5	12.5	17.5	1800	9.900
		Bipolar-Series	820	1148	1.9	4.0	46				
	PHB86S114-802	Bipolar-Parallel	820	1148	5.6	0.55	5.5	12.5	17.5	1800	9.900
		Bipolar-Series	820	1148	2.8	2.2	22.0				
	PHB86S114-803	Bipolar-Parallel	820	1148	7.0	0.4	3.2	12.5	17.5	1800	9.900
		Bipolar-Series	820	1148	3.5	1.5	12.8				
PHB86S126 126mm	PHB86S126-801	Bipolar-Parallel	900	1260	3.8	1.25	12.5	18.5	25.9	2200	12.10
		Bipolar-Series	900	1260	1.9	5.0	50				
	PHB86S126-802	Bipolar-Parallel	900	1260	5.6	0.65	5.8	18.5	25.9	2200	12.10
		Bipolar-Series	900	1260	2.8	2.6	23.2				
	PHB86S126-803	Bipolar-Parallel	900	1260	7.0	0.43	3.4	18.5	25.9	2200	12.10
		Bipolar-Series	900	1260	3.5	1.7	13.6				
PHB86S150 150mm	PHB86S150-801	Bipolar-Parallel	1200	1680	3.8	1.5	17.5	24.5	34.3	2500	13.75
		Bipolar-Series	1200	1680	1.9	5.8	70				
	PHB86S150-802	Bipolar-Parallel	1200	1680	5.6	0.7	9.2	24.5	34.3	2500	13.75
		Bipolar-Series	1200	1680	2.8	2.8	36.8				
	PHB86S150-803	Bipolar-Parallel	1200	1680	7.0	0.45	5.2	24.5	34.3	2500	13.75
		Bipolar-Series	1200	1680	3.5	1.8	20.8				

Mechanical Dimension

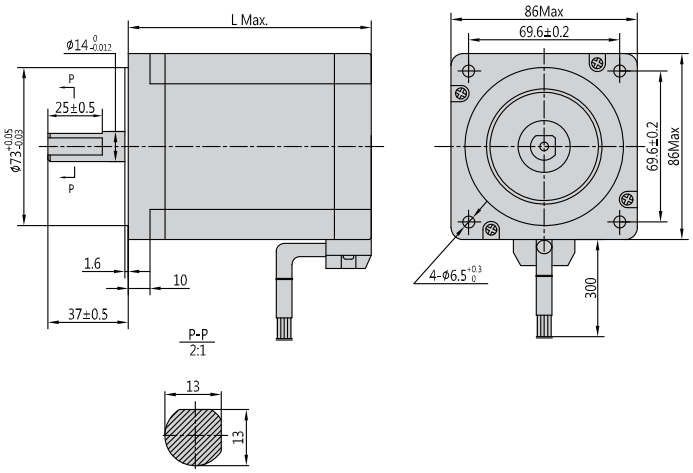

Series	L	Mass
	mm (in.)	kg (lb.)
PHB86S66	66 (2.60)	2.0 (4.40)
PHB86S78	78 (3.07)	2.5 (5.50)
PHB86S98	98 (3.86)	3.0 (6.60)
PHB86S114	114 (4.49)	4.0 (8.80)
PHB86S126	126 (4.96)	4.5 (9.90)
PHB86S150	150 (5.91)	5.0 (11.0)

PHB110S Series

Key Features

- High Torque
- Smooth Movement
- High Inertia

Option

Gearbox Encoder

Step Angle	1.8°
Step Angle Accuracy	±5% (full step, no load)
Resistance Accuracy	±10%
Inductance Accuracy	±20%
Temperature Rise	80 °C Max.(rated current, 2 phase on)
Ambient Temperature	-20 °C ~ +50 °C
Insulation Resistance	100 MΩ Min., 500VDC
Dielectric Strength	1800 VAC for one minute
Shaft Radial Play	0.02 Max. (450 g-load)
Shaft Axial Play	0.08 Max. (450 g-load)

Specifications

- Bi-polar

Series & Length	Model Number	Holding Torque		Rated Current	Resistance per phase	Inductance per phase	Detent Torque		Rotor Inertia	
		N.m	oz-in	A	ohm	mH	N.cm	oz-in	g.cm²	oz-in²
PHB110S100 100mm	PHB110S100-460	12	1680	6.0	0.5	6.0	20.5	28.7	4000	22.00
PHB110S117 117mm	PHB110S117-460	15	2100	6.0	0.57	7.5	24.5	34.3	6000	33.00
PHB110S126 126mm	PHB110S126-460	18	2520	6.0	0.66	10.5	28.5	39.9	9000	49.50
PHB110S150 150mm	PHB110S150-460	22	3080	6.0	0.8	13.5	35.5	49.7	11000	60.50
PHB110S165 165mm	PHB110S165-460	26	3640	6.0	0.87	16.0	45.5	63.7	13000	71.50
PHB110S200 200mm	PHB110S200-460	29	4060	6.0	1.1	22.0	65.5	91.7	25000	137.5
	PHB110S200-480	29	4060	8.0	0.65	13.5	65.5	91.7	25000	137.5

Mechanical Dimension

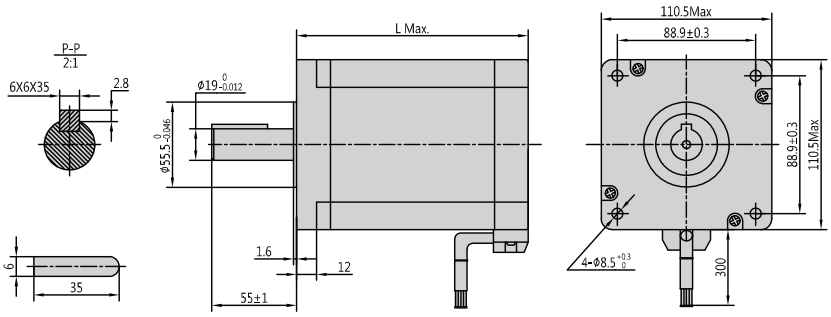

Series	L	Mass
	mm (in.)	kg (lb.)
PHB110S100	100 (3.94)	5.0 (11.0)
PHB110S117	117 (4.61)	5.8 (12.8)
PHB110S126	126 (4.96)	6.8 (15.0)
PHB110S150	150 (5.91)	8.4 (18.5)
PHB110S165	165 (6.50)	9.3 (20.5)
PHB110S200	200 (7.87)	12.0 (26.4)

PHB42R Series

Key Features

- Small Size
- Smooth Movement
- Low Inertia

Step Angle	3.75°
Step Angle Accuracy	±5% (full step, no load)
Resistance Accuracy	±10%
Inductance Accuracy	±20%
Temperature Rise	80 °C Max.(rated current, 3 phase on)
Ambient Temperature	-20 °C ~ +50 °C
Insulation Resistance	100 MΩ Min., 500VDC
Dielectric Strength	500 VAC for one minute
Shaft Radial Play	0.02 Max. (450 g-load)
Shaft Axial Play	0.08 Max. (450 g-load)

Specifications

- 3 Wires

Series & Length	Model Number	Holding Torque		Rated Current	Resistance per phase	Inductance per phase	Detent Torque		Rotor Inertia		# of Leads
		N.cm	oz-in	A	ohm	mH	N.cm	oz-in	g.cm²	oz-in²	Pin
PHB42R40 40mm	PHB42R40-315	20	28	1.5	2.5	5.5	2.2	3.08	54	0.297	3
PHB42R48 48mm	PHB42R48-315	30	42	1.5	3.6	7.0	2.6	3.64	68	0.374	3

Mechanical Dimension

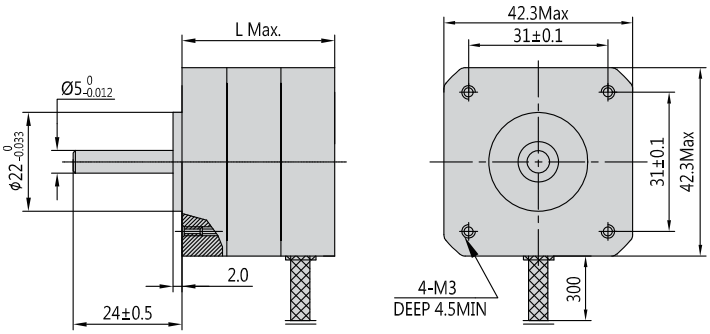

Series	L	Mass
	mm (in.)	g (lb.)
PHB42R40	40 (1.57)	280 (0.62)
PHB42R48	48 (1.89)	350 (0.77)

PHB42T Series

Key Features

- Small Size
- Smooth Movement
- Low Inertia

Step Angle	1.2°
Step Angle Accuracy	±5% (full step, no load)
Resistance Accuracy	±10%
Inductance Accuracy	±20%
Temperature Rise	80 °C Max.(rated current, 3 phase on)
Ambient Temperature	-20 °C ~ +50 °C
Insulation Resistance	100 MΩ Min., 500VDC
Dielectric Strength	500 VAC for one minute
Shaft Radial Play	0.02 Max. (450 g-load)
Shaft Axial Play	0.08 Max. (450 g-load)

Specifications

- 3 Wires

Series & Length	Model Number	Holding Torque		Rated Current	Resistance per phase	Inductance per phase	Detent Torque		Rotor Inertia		# of Leads
		N.cm	oz-in	A	ohm	mH	N.cm	oz-in	$g.cm^2$	$oz\text{-}in^2$	Pin
PHB42T34 34mm	PHB42T34-330	10	14	3.0	0.65	0.2	1.6	2.24	34	0.187	3
PHB42T40 40mm	PHB42T40-330	20	28	3.0	0.79	0.35	2.2	3.08	54	0.297	3
PHB42T48 48mm	PHB42T48-330	27	37.8	3.0	0.98	0.43	2.6	3.64	68	0.374	3

Mechanical Dimension

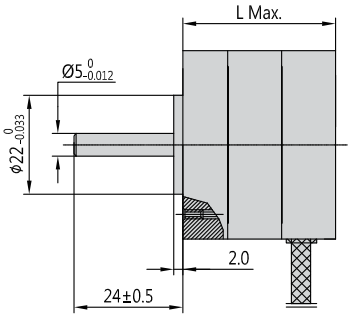

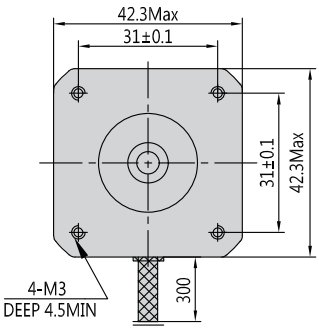

Series	L	Mass
	mm (in.)	g (lb.)
PHB42T34	34 (1.34)	220 (0.49)
PHB42T40	40 (1.57)	280 (0.62)
PHB42T48	48 (1.89)	350 (0.77)

PHB57T Series

Key Features

- High Torque
- Smooth Movement
- High Speed

Step Angle	1.2°
Step Angle Accuracy	±5% (full step, no load)
Resistance Accuracy	±10%
Inductance Accuracy	±20%
Temperature Rise	80 °C Max.(rated current, 3 phase on)
Ambient Temperature	-20 °C ~ +50 °C
Insulation Resistance	100 MΩ Min., 500VDC
Dielectric Strength	500 VAC for one minute
Shaft Radial Play	0.02 Max. (450 g-load)
Shaft Axial Play	0.08 Max. (450 g-load)

Specifications

- 6 Wires

Series & Length	Model Number	Holding Torque		Rated Current	Resistance per phase	Inductance per phase	Detent Torque		Rotor Inertia		# of Leads
		N.cm	oz-in	A	ohm	mH	N.cm	oz-in	g.cm²	oz-in²	Pin
PHB57T56 56mm	PHB57T56-607	80	112	4.6	0.7	1.7	4.0	5.6	300	1.65	6
PHB57T78 78mm	PHB57T78-608	150	210	5.2	0.8	1.8	7.0	9.8	440	2.42	6
PHB57T80 80mm	PHB57T80-620	160	224	3.1	0.65	2.0	8.0	11.2	480	2.64	6

Mechanical Dimension

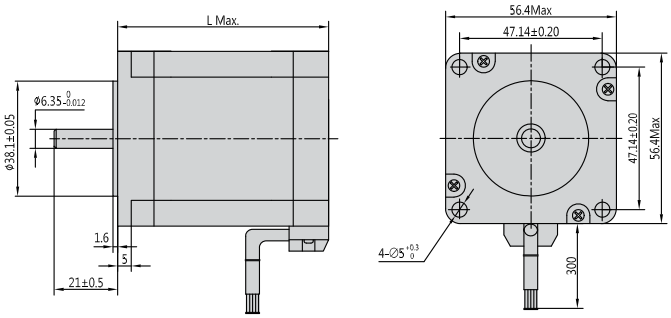

Series	L	Mass
	mm (in.)	g (lb.)
PHB57T56	56 (2.20)	700 (1.54)
PHB57T78	78 (3.08)	1050 (2.31)
PHB57T80	80 (3.15)	1100 (2.43)

PHB60T Series

Key Features

- High Accuracy
- High Inertia
- High Torque

Step Angle	1.2°
Step Angle Accuracy	±5% (full step, no load)
Resistance Accuracy	±10%
Inductance Accuracy	±20%
Temperature Rise	80 °C Max.(rated current,3 phase on)
Ambient Temperature	-20 °C ~ +50 °C
Insulation Resistance	100 MΩ Min., 500VDC
Dielectric Strength	500 VAC for one minute
Shaft Radial Play	0.02 Max. (450 g-load)
Shaft Axial Play	0.08 Max. (450 g-load)

Specifications

- 3 Wires

Series & Length	Model Number	Holding Torque		Rated Current	Resistance per phase	Inductance per phase	Detent Torque		Rotor Inertia		# of Leads
		N.cm	oz-in	A	ohm	mH	N.cm	oz-in	$g.cm^2$	$oz\text{-}in^2$	Pin
PHB60T54 54mm	PHB60T54-335	80	112	3.5	0.8	1.8	3.5	4.9	280	1.540	3
	PHB60T54-346	80	112	4.6	0.5	0.8	3.5	4.9	280	1.540	3
PHB60T64 64mm	PHB60T64-335	110	154	3.5	1.0	2.5	5.0	7	380	2.090	3
	PHB60T64-346	110	154	4.6	0.7	1.2	5.0	7	380	2.090	3
PHB60T76 76mm	PHB60T76-335	130	182	3.5	1.2	3.2	6.5	9.1	440	2.420	3
	PHB60T76-346	130	182	4.6	0.8	1.5	6.5	9.1	440	2.420	3
PHB60T90 90mm	PHB60T90-335	160	224	3.5	1.5	4.5	8.0	11.2	580	3.190	3
	PHB60T90-346	160	224	4.6	1.0	2.5	8.0	11.2	580	3.190	3

Mechanical Dimension

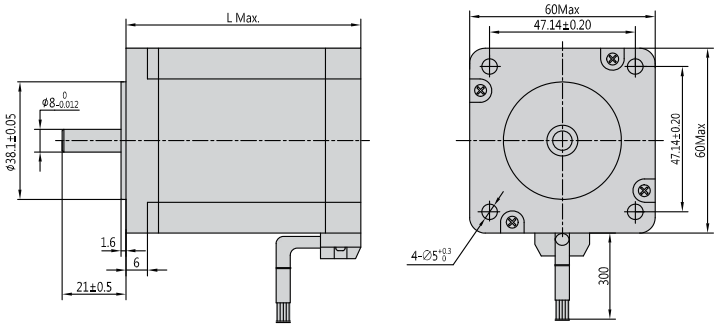

Series	L	Mass
	mm (in.)	g (lb.)
PHB60T54	54 (2.13)	280 (0.62)
PHB60T64	64 (2.52)	380 (0.84)
PHB60T76	76 (2.99)	440 (0.97)
PHB60T90	90 (3.54)	580 (1.28)

PHB110T Series

Key Features

- High Torque
- Low Noise
- Low Speed

Step Angle	1.2°
Step Angle Accuracy	±5% (full step, no load)
Resistance Accuracy	±10%
Inductance Accuracy	±20%
Temperature Rise	80 °C Max.(rated current, 3 phase on)
Ambient Temperature	-20 °C ~ +50 °C
Insulation Resistance	100 MΩ Min., 500VDC
Dielectric Strength	1800 VAC for one minute
Shaft Radial Play	0.02 Max. (450 g-load)
Shaft Axial Play	0.08 Max. (450 g-load)

Specifications

- 3 Wires

Series & Length	Model Number	Holding Torque		Rated Current	Resistance per phase	Inductance per phase	Detent Torque		Rotor Inertia	
		N.cm	oz-in	A	ohm	mH	N.cm	oz-in	kg.cm²	oz-in²
PHB110T126 126mm	PHB110T126-360	11.0	15.4	6.0	0.8	6.0	28.5	39.9	9.0	49.50
PHB110T150 150mm	PHB110T150-360	12.5	17.5	6.0	1.0	8.0	35.5	49.7	11.0	60.50
PHB110T165 165mm	PHB110T165-360	14.0	19.6	6.0	1.2	9.5	45.5	63.7	13.0	71.50
PHB110T200 200mm	PHB110T200-360	15.5	21.7	6.0	1.45	13.2	65.5	91.7	25.0	137.5

Mechanical Dimension

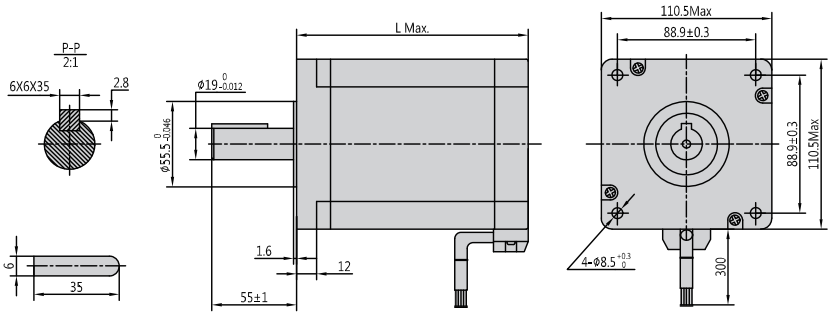

Series	L	Mass
	mm (in.)	kg (lb.)
PHB110T126	126 (4.96)	6.8 (15.0)
PHB110T150	150 (5.91)	8.4 (18.5)
PHB110T165	165 (6.50)	9.3 (20.5)
PHB110T200	200 (7.87)	12.0 (26.4)

PHB39G Series

Key Features

- Small Size
- Smooth Movement
- Low Noise

Step Angle	0.36°
Step Angle Accuracy	±5% (full step, no load)
Resistance Accuracy	±10%
Inductance Accuracy	±20%
Temperature Rise	80 °C Max.(rated current, 5 phase on)
Ambient Temperature	-20 °C ~ +50 °C
Insulation Resistance	100 MΩ Min., 500VDC
Dielectric Strength	500 VAC for one minute
Shaft Radial Play	0.02 Max. (450 g-load)
Shaft Axial Play	0.08 Max. (450 g-load)

Specifications

- 5 Wires

Series & Length	Model Number	Holding Torque		Rated Current	Resistance per phase	Inductance per phase	Detent Torque		Rotor Inertia	
		N.cm	oz-in	A	ohm	mH	N.cm	oz-in	g.cm²	oz-in²
PHB39G31 31mm	PHB39G31-508	7.5	10.5	0.75	1.8	1.8	1.2	1.68	14	0.077
PHB39G40 41mm	PHB39G40-508	13.5	18.9	0.75	2.5	2.5	1.6	2.24	25	0.138

Mechanical Dimension

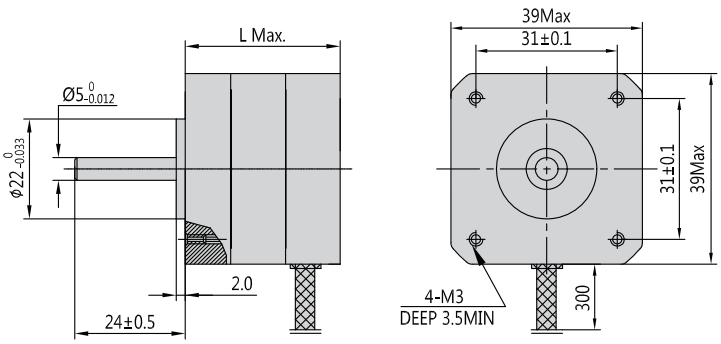

Series	L	Mass
	mm (in.)	g (lb.)
PHB39G31	31 (1.22)	140 (0.31)
PHB39G40	40 (1.57)	200 (0.44)

PHB60F Series

Key Features

- Small Size
- Smooth Movement
- Low Noise

Step Angle	0.72°
Step Angle Accuracy	±5% (full step, no load)
Resistance Accuracy	±10%
Inductance Accuracy	±20%
Temperature Rise	80 °C Max.(rated current,5 phase on)
Ambient Temperature	-20 °C ~ +50 °C
Insulation Resistance	100 MΩ Min., 500VDC
Dielectric Strength	500 VAC for one minute
Shaft Radial Play	0.02 Max. (450 g-load)
Shaft Axial Play	0.08 Max. (450 g-load)

Specifications

- 5 Wires

Series & Length	Model Number	Holding Torque		Rated Current	Resistance per phase	Inductance per phase	Detent Torque		Rotor Inertia	
		N.cm	oz-in	A	ohm	mH	N.cm	oz-in	g.cm²	oz-in²
PHB60F45 45mm	PHB60F45-508	55	77	0.75	2.6	4.6	3.0	4.2	250	1.375
	PHB60F45-515	55	77	1.5	0.65	0.9	3.0	4.2	250	1.375
PHB60F54 54mm	PHB60F54-508	80	112	0.75	3.3	8.2	3.5	4.9	280	1.540
	PHB60F54-515	80	112	1.5	0.77	1.6	3.5	4.9	280	1.540
PHB60F64 64mm	PHB60F64-508	100	140	0.75	4	9.2	5.0	7	380	2.090
	PHB60F64-515	100	140	1.5	0.8	1.8	5.0	7	380	2.090
PHB60F76 76mm	PHB60F76-508	130	182	0.75	5	13.5	6.5	9.1	440	2.420
	PHB60F76-515	130	182	1.5	0.98	2.6	6.5	9.1	440	2.420
PHBB60F90 90mm	PHB60F90-508	160	224	0.75	5.8	19.5	8.0	11.2	580	3.190
	PHB60F90-515	160	224	1.5	1.2	3.8	8.0	11.2	580	3.190

Mechanical Dimension

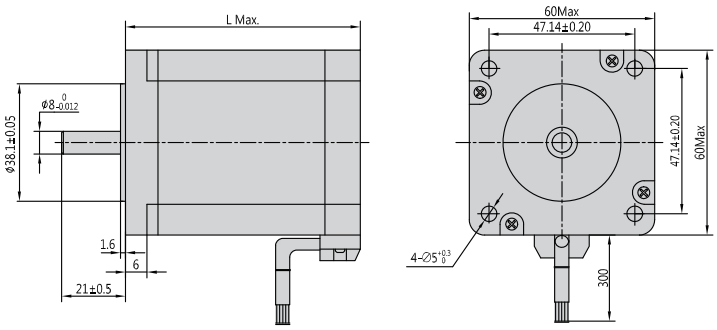

Series	L	Mass
	mm (in.)	g (lb.)
PHB60F45	45 (1.77)	600 (2.13)
PHB60F54	54 (2.13)	780 (1.72)
PHB60F64	64 (2.52)	920 (2.02)
PHB60F76	76 (2.99)	1200 (2.64)
PHB60F90	90 (3.54)	1400 (3.08)

PHB86F Series

Key Features

- High Acceleration
- High Accuracy
- High Torque

Step Angle	0.72°
Step Angle Accuracy	±5% (full step, no load)
Resistance Accuracy	±10%
Inductance Accuracy	±20%
Temperature Rise	80 °C Max.(rated current,5 phase on)
Ambient Temperature	-20 °C ~ +50 °C
Insulation Resistance	100 MΩ Min., 500VDC
Dielectric Strength	820 VAC for one minute
Shaft Radial Play	0.02 Max. (450 g-load)
Shaft Axial Play	0.08 Max. (450 g-load)

Specifications

- 5 Wires

Series & Length	Model Number	Holding Torque		Rated Current	Resistance per phase	Inductance per phase	Detent Torque		Rotor Inertia	
		N.cm	oz-in	A	ohm	mH	N.cm	oz-in	Kg.cm²	oz-in²
PHB86F66 66mm	PHB86F66-515	1.8	1.8	1.5	1.8	15	1.8	2.52	0.85	4.68
PHB86F78 78mm	PHB86F78-515	2.5	2.5	1.5	2.1	22	2.5	3.50	1.05	5.78
PHB86F98 98mm	PHB86F98-515	4.3	4.3	1.5	2.8	25	4.3	6.02	1.55	8.53
PHB86F114 114mm	PHB86F114-528	5.1	5.1	2.8	0.73	3.8	5.1	7.14	1.8	9.90
PHB86F126 126mm	PHB86F126-528	5.8	5.8	2.8	0.85	4.5	5.8	8.12	2.2	12.1
PHB86F150 150mm	PHB86F150-528	7.5	7.5	2.8	1.0	5.5	7.5	10.5	2.5	13.8

Mechanical Dimension

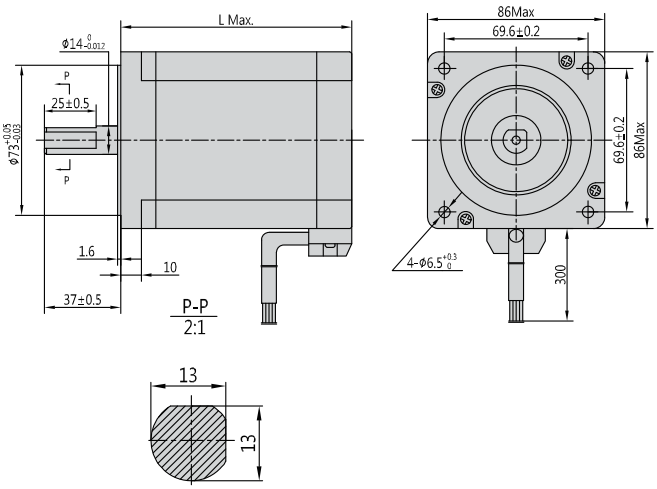

Series	L	Mass
	mm (in.)	kg (lb.)
PHB86F66	66 (2.60)	2.0 (4.40)
PHB86F78	78 (3.07)	2.5 (5.50)
PHB86F98	98 (3.86)	3.0 (6.60)
PHB86F114	114 (4.49)	3.5 (7.70)
PHB86F126	126 (4.96)	3.9 (8.58)
PHB86F150	150 (5.91)	4.2 (9.24)

B

Hybrid Stepper Gear Motor

PHG Series

Description	29
Applications	29
Part Number	29
NEMA 8 · PHG20Y Series	30
NEMA 11 · PHG28Y Series	31
NEMA 14 · PHG35S Series	32
NEMA 17 · PHG42S Series	33
NEMA 17 · PHG42S Series	34
NEMA 23 · PHG57S Series	35
NEMA 24 · PHG60S Series	36
NEMA 34 · PHG86S Series	37

Description

PrimoPal's PHG series hybrid stepper gear motor offers a wide range of gear ratios to fulfill your project needs. The planetary gearhead (transmission series) have be en strictly tested to ensure long life and maximum efficiency.They are low-cost solutions and can perfectly meet your needs of motion or automation control. Besides, high precision gearhead, custom motor winding and gearbox specs are also available.

Applications

PrimoPal's PHG series hybrid stepper gear motors are widely used in much of today's robotic equipment, laboratory instrumentation, machinery automation, analytical equipment, computer peripherals, semiconductor industries, and other applications that require precision motion.

Part Number

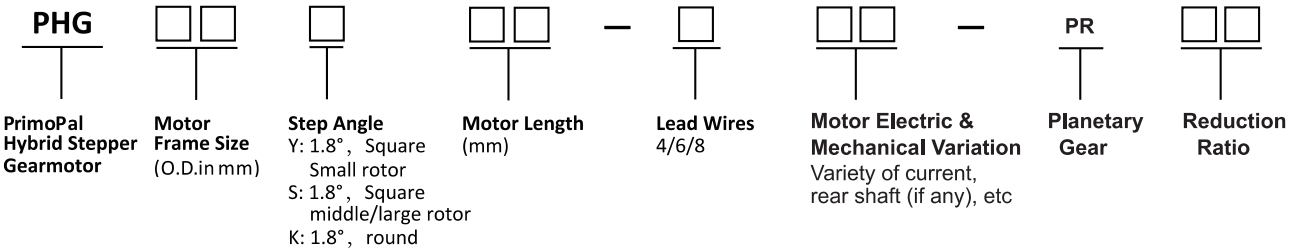

PHG20Y Series

Key Features

- Small Size
- Long Life
- High Precision

Stepper Motor Electrical Specifications

Series Model	Rated Current (A)	Phase Resistance (Ω)	Phase Inductance (mH)	Lead Wire (No.)	Holding Torque (N.cm)	Motor Length L (mm)	Rotor Inertia (g.cm²)	Motor Weight (g)	Step Angle (°)
PHG20Y28-406	0.6	3.2	0.9	4	1.8	31	2.5	50	1.8
PHG20Y34-406		4.5	1.2		2.0	37	3.2	70	
PHG20Y40-406		5.8	1.6		3.0	43	4.5	82	

Plantary Gearbox Technical Data

Gear Ratio		Length (mm)	Efficiency	Rated Torque (N.m)	Permissible Torque (Max)(N.m)	Noise (dB)	Backlash min. at No-load	Weight (g)
1 Stage	3.71	21	90%	0.1	0.3	@1m ≤60dB	≤60arcmin	35
	5.18							
2 Stage	14	27.2	81%	0.4	1.2			44
	19							
	27							
3 Stage	51	33.4	73%	0.8	2.5			53
	71							
	100							
	139							

Dimensions(Unit:mm)

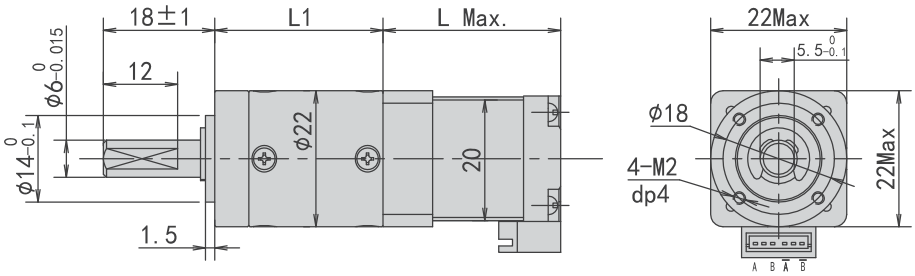

PHG28Y Series

Key Features

- Small Size
- Long Life
- High Precision

Stepper Motor Electrical Specifications

Series Model	Rated Current (A)	Phase Resistance (Ω)	Phase Inductance (mH)	Lead Wire (No.)	Holding Torque (N.cm)	Motor Length L (mm)	Rotor Inertia (g.cm²)	Motor Weight (g)	Step Angle (°)
PHG28Y28-401	0.6	4.2	2.2	4	4.5	31	6	105	1.8
PHG28Y33-401		5.5	3.2		6.0	36	8	110	
PHG28Y41-401		7.0	6.0		8.0	44	11	140	
PHG28Y50-401		9.0	7.2		10.0	53	13	180	

Plantary Gearbox Technical Data

Gear Ratio		Length (mm)	Efficiency	Rated Torque (N.m)	Permissible Torque (Max) (N.m)	Noise (dB)	Backlash min. at No-load	Weight (g)
1 Stage	3.71	25.6	90%	0.3	1.0	@1m ≤60dB	≤60arcmin	48
	5.18							
	6.75							
2 Stage	14	34	81%	1.2	3.5			55
	19							
	27							
	35							
	46							
3 Stage	51	42	73%	2.5	7.5			64
	71							
	100							
	139							
	181							
	236							
	307							

Dimensions(Unit:mm)

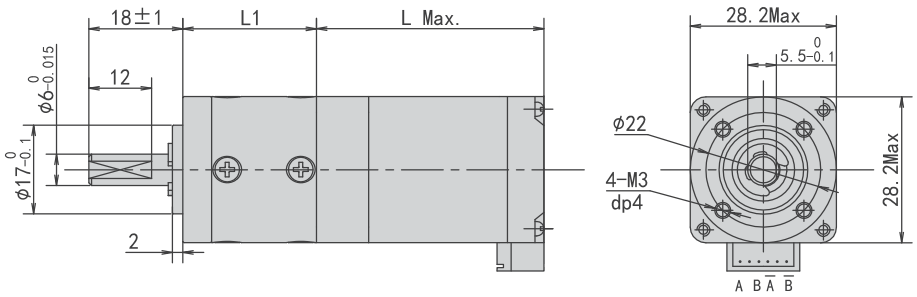

PHG35S Series

Key Features

- Small Size
- Long Life
- High Precision

Stepper Motor Electrical Specifications

Series Model	Rated Current (A)	Phase Resistance (Ω)	Phase Inductance (mH)	Lead Wire (No.)	Holding Torque (N.cm)	Motor Length L (mm)	Rotor Inertia (g.cm²)	Motor Weight (g)	Step Angle (°)
PHG35S28-402	0.8	4.2	4.5	4	14	31	12	120	1.8
PHG35S34-402	0.8	7.5	9.8		20	39	18	160	
PHG35S52-420	2.0	1.6	2.3		40	58	26	230	

Plantary Gearbox Technical Data

Gear Ratio		Length (mm)	Efficiency	Rated Torque (N.m)	Permissible Torque (Max) (N.m)	Noise (dB)	Backlash min. at No-load	Weight (g)
1 Stage	3.71	25.6	90%	0.3	1.0	@1m ≤60dB	≤60arcmin	113
	5.18							
	6.75							
2 Stage	14	34	81%	1.2	3.5			145
	19							
	27							
	35							
	46							
3 Stage	51	42	73%	2.5	7.5			184
	71							
	100							
	139							
	181							
	236							
	307							

Dimensions(Unit:mm)

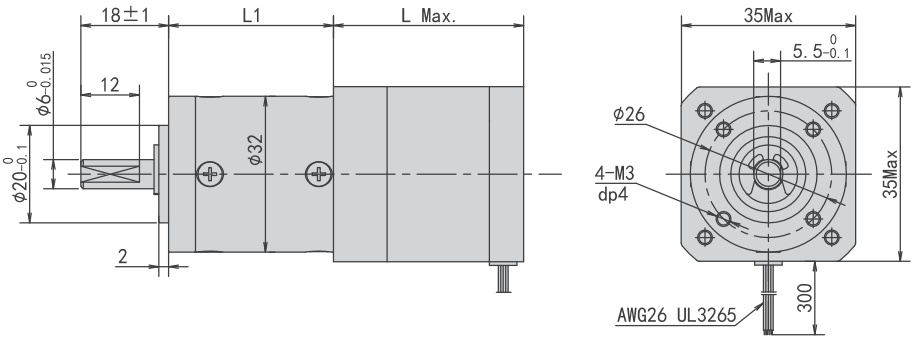

PHG42S Series

Key Features

- High Torque
- Long Life
- High Precision

Stepper Motor Electrical Specifications

Series Model	Rated Current (A)	Phase Resistance (Ω)	Phase Inductance (mH)	Lead Wire (No.)	Holding Torque (N.cm)	Motor Length L (mm)	Rotor Inertia (g.cm²)	Motor Weight (g)	Step Angle (°)
PHG42S40-420	2.3	0.9	1.3	4	40	43	54	280	1.8
PHG42S48-420		1.1	1.5		50	51	68	350	
PHG42S60-420		1.4	2.5		70	63	80	480	
PHG42S63-420		1.5	2.2		80	66	85	500	

Plantary Gearbox Technical Data

Gear Ratio		Length (mm)	Efficiency	Rated Torque (N.m)	Permissible Torque (Max) (N.m)	Noise (dB)	Backlash min. at No-load	Weight (g)
1 Stage	3.71	25.6	90%	0.3	1.0	@1m ≤60dB	≤60arcmin	182
	5.18							
	6.75							
2 Stage	14	34	81%	1.2	3.5			191
	19							
	27							
	35							
	46							
3 Stage	51	42	73%	2.5	7.5			230
	71							
	100							
	139							
	181							
	236							
	307							

Dimensions(Unit:mm)

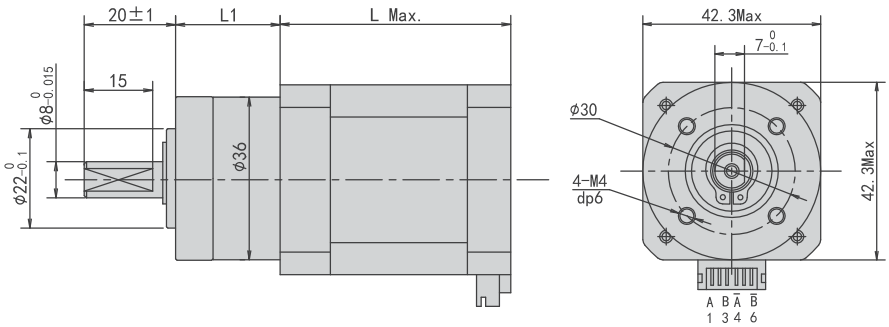

PHG42S Series

Key Features

- High Torque
- Long Life
- High Precision

Stepper Motor Electrical Specifications

Series Model	Rated Current (A)	Phase Resistance (Ω)	Phase Inductance (mH)	Lead Wire (No.)	Holding Torque (N.cm)	Motor Length L (mm)	Rotor Inertia (g.cm²)	Motor Weight (g)	Step Angle (°)
PHG42S40-420	2.3	0.9	1.3	4	40	43	54	280	1.8
PHG42S48-420		1.1	1.5		50	51	68	350	
PHG42S60-420		1.4	2.5		70	63	80	480	
PHG42S63-420		1.5	2.2		80	66	85	500	

Plantary Gearbox Technical Data

Gear Ratio		Length (mm)	Efficiency	Rated Torque (N.m)	Permissible Torque (Max) (N.m)	Noise (dB)	Backlash min. at No-load	Weight (g)
1 Stage	5	28.5	90%	6	12	@1m ≤60dB	≤60arcmin	140-230
	10							
2 Stage	20	38	81%	12	22			180-280
	25							
	35							
	40							
	45							
	50							
	100							

Dimensions(Unit:mm)

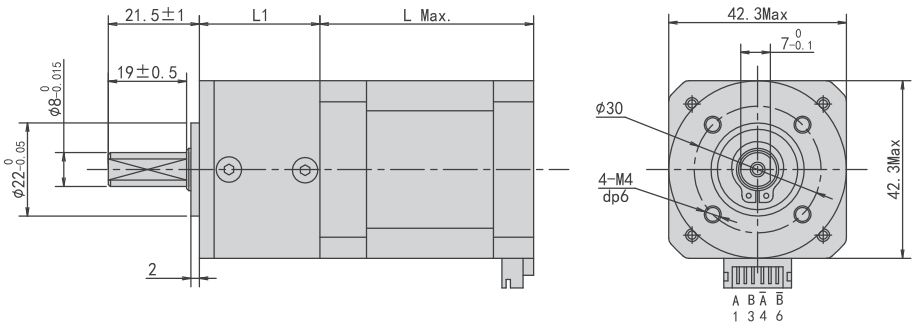

PHG57S Series

Key Features

- High Torque
- High Precision
- Long Life Time

Stepper Motor Electrical Specifications

Series Model	Rated Current (A)	Phase Resistance (Ω)	Phase Inductance (mH)	Lead Wire (No.)	Holding Torque (N.cm)	Motor Length L (mm)	Rotor Inertia (g.cm²)	Motor Weight (g)	Step Angle (°)
PHG57S56-404	4.2	0.35	1.2	4	1.1	56	280	0.68	1.8
PHG57S76-404		0.55	1.8		1.8	76	440	1.05	
PHG57S100-404		0.75	3.0		2.5	100	680	1.25	

Plantary Gearbox Technical Data

Gear Ratio		Length (mm)	Efficiency	Rated Torque (N.m)	Permissible Torque (Max) (N.m)	Noise (dB)	Backlash min. at No-load	Weight (g)
1 Stage	5	55	95%	25	40	@1m ≤60dB	≤15arcmin	600-800
	10							
2 Stage	15	71	90%	40	60		≤25arcmin	800-960
	20							
	25							
	30							
	40							
	50							

Dimensions(Unit:mm)

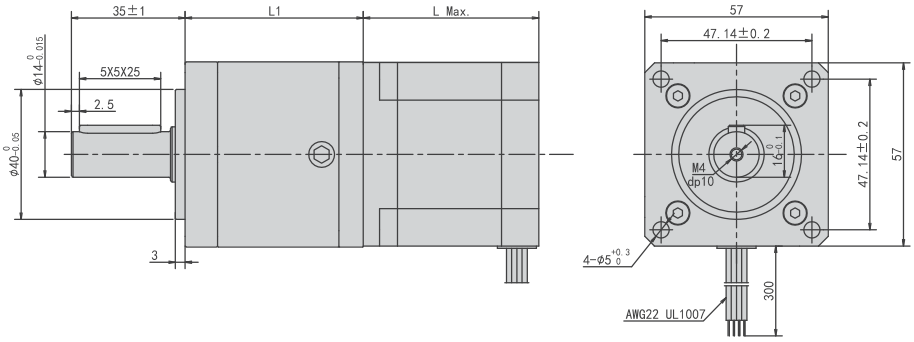

NEMA 24 1.8° Hybrid Stepper Gear Motor

PHG60S Series

Key Features

- High Torque
- High Precision
- Long Life Time

Stepper Motor Electrical Specifications

Series Model	Rated Current (A)	Phase Resistance (Ω)	Phase Inductance (mH)	Lead Wire (No.)	Holding Torque (N.cm)	Motor Length L (mm)	Rotor Inertia (g.cm²)	Motor Weight (g)	Step Angle (°)
PHG60S56-404	4.2	0.45	1.3	4	1.5	56	350	0.7	1.8
PHG60S64-404		0.6	2.0		2.2	76	550	1.15	
PHG60S76-404		0.75	3.3		2.8	90	780	1.4	
PHG60S90-404		0.9	3.5		3.2	100	850	1.55	

Plantary Gearbox Technical Data

Gear Ratio		Length (mm)	Efficiency	Rated Torque (N.m)	Permissible Torque (Max) (N.m)	Noise (dB)	Backlash min. at No-load	Weight (g)
1 Stage	5	58	95%	25	40	@1m ≤60dB	≤15arcmin	600-800
	10							
2 Stage	15	75	90%	40	60		≤25arcmin	800-960
	20							
	25							
	30							
	40							
	50							

Dimensions(Unit:mm)

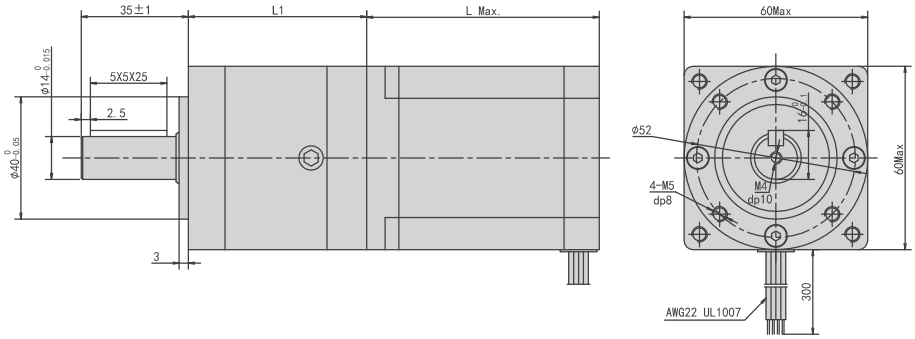

PHG86S Series

Key Features

- High Torque
- High Precision
- Long Life

Stepper Motor Electrical Specifications

Series Model	Rated Current (A)	Phase Resistance (Ω)	Phase Inductance (mH)	Lead Wire (No.)	Holding Torque (N.cm)	Motor Length L (mm)	Rotor Inertia (g.cm²)	Motor Weight (g)	Step Angle (°)
PHG86S66-470	7.0	0.16	0.9	4	3.0	66	0.85	2.0	1.8
PHG86S78-470		0.2	1.6		4.5	78	1.05	2.5	
PHG86S114-470		0.33	3.2		8.5	114	1.8	3.5	
PHG86S150-470		0.4	4.8		12	150	2.5	4.2	

Plantary Gearbox Technical Data

Gear Ratio		Length (mm)	Efficiency	Rated Torque (N.m)	Permissible Torque (Max) (N.m)	Noise (dB)	Backlash min. at No-load	Weight (g)
1 Stage	5	74	95%	50	100	@1m ≤60dB	≤15arcmin	3000
	10							
2 Stage	15	93	90%	80	160		≤25arcmin	4000
	20							
	25							
	30							
	40							
	50							

Dimensions(Unit:mm)

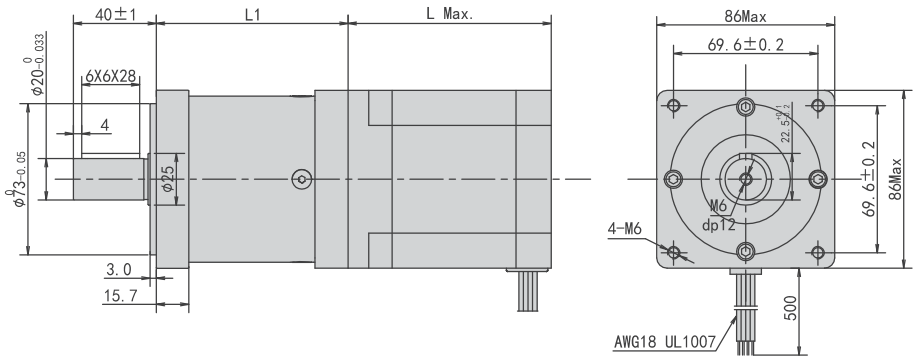

C

Hybrid Stepper Motor Linear Actuator

C 1 Hybrid Stepper Motor Lead Screw Linear Actuator

Description	39
Applications	39
Standard Versions	39
Part Number	40
Product Selection Guide	41
General Specifications	42
NEMA 8 · PHBL20 series	43-45
NEMA11 · PHBL28 Series	46-48
NEMA14 · PHBL35 Series	49-53
NEMA17 · PHBL42 Series	54-58
NEMA23 · PHBL57 Series	59-63
NEMA24 · PHBL60 Series	64-68
NEMA34 · PHBL86 Series	69-70
Accessories and Options	71-72
Installation Guide	73-75

Description

PrimoPal's PHBL series hybrid stepper linear actuators come in six sizes, from 20 mm square to 86 mm square corresponding to size 8, size 11, size 14, size 17, size 23, and size 34. Each size has three designs available-captive, non-captive and an external linear version. There are over twenty different travels per step available, from 0.00006inch(0.001524 mm) to 0.005 inch(0.127 mm). Micro stepping can be used for even finer resolution.

Applications

PrimoPal's PHBL Series hybrid stepper linear actuators are widely used in much of today's sophisticated medical equipment, laboratory instrumentation, machinery automation, analytical equipment, computer peripherals, semiconductor industries, and other applications that require precision motion.

Standard Versions

Frame Size			
NEMA 8	External	Non-captive	Captive
NEMA 11	External	Non-captive	Captive
NEMA 14	External	Non-captive	Captive
NEMA 17	External	Non-captive	Captive
NEMA 23	External	Non-captive	Captive
NEMA 24	External	Non-captive	Captive
NEMA 34	External	Non-captive	

Part Number

PHBL □□ □ □□ – □ □ □□ – □ □□□

PrimoPal Hybrid Lead Screw Linear Actuator

Frame Size
20: NEMA 8(20mm)
28: NEMA 11(28mm)
……

Movement Type
E: External
N: Non-captive
C: Captive

Body Length
30: 30mm
40: 40mm
……

No. of Lead Wires
0: Connector
4: 4 Pins
……

Step Angle
S: 2 phase, 1.8°
M: 2 phase, 0.9°
T: 3 phase, 1.2°
F: 5 phase, 0.72°
……

Electric Specs
Variety of current, resistance, etc

Lead Screw Code

Lead Screw Specs
Variety of dia., length, etc

Product Selection Guide

To reduce complexity and cost of a design, it is important to accurately size a motor/lead screw combination. Below are a few simple steps in selecting the necessary components for a given application.

Step 1 – Choosing a motor size (Force requirements)

Here is a general overview of the output thrust vs. motor size:

	Motor Sizes (mm)	Max Thrust (N)	Recommended Load Limit (N)
Hybrid stepper motor based linear actuators	20	70	45
	28	150	140
	35	300	230
	42	600	320
	57	1300	910
	86	2400	2270

Step 2 – Choosing a screw lead (Force and Speed requirements)

Here is a general overview of the output thrust vs. motor size:
After estimating the required thrust and choosing a motor size that may fit your application, the speed and acceleration of the load must be considered and evaluated to choose an appropriate screw lead. Due to the nature of load screws, the output speed and output thrust achievable by a motor/lead screw com-bination are two inversely proportional variables.(i.e, increasing the required thrust will lower the achievable speed for a motor/lead screw combination). Therefore, the maximum output force of a system is lowered for applications that required higher speed.
For complete motor/lead screw selection data, please refer to the speed/thrust curves for each motor size. Although these two steps provide a solid foundation in motor/lead screw selection, other variables must also be considered:

·Duty Cycle
·Desired Life of a System
·Environmental Considerations
·Positional Repeatability
·Acceptable Backlash
·Acceleration/Deceleration
·Driver Specifications
·Vertical or Horizontal

Because of the numerous variables involved in motor selection, it is highly recommended for users to proceed with physical testing to accurately determine the motor/lead screw combination required for a given application.

NOTE: Although this section aims to provide a rough guide to select a motor/lead screw combination that best fits an application, we recommend to contact our application engineering staff for further assistance with the motor selection process.

General Specifications

Unless specified, PrimoPal's hybrid linear systems have the characteristics as follows:

Lead screw material	precision cold rolled 303 Stainless steel
Screw coating	Teflon coating is optional
Standard screw accuracy (Lead accuracy)	0.0006 in/inch
Screw repeatability	± 0.006 inch
System repeatability (Motor and Screw)	Nominally the same as screw repeatability, motor variance adds ± 6 micro steps.
Screw straightness	0.003 in/foot, measured as Total Indicated Runout (TIR). All screws are carefully checked for straightness before shipment.
Screw efficiency	From 35% to 85% dependent on lead. Also depends on the usage of an anti-backlash nut with screw. The larger the lead, the higher the efficiency of the screw.
Ambient temperature	-20 °C to +50 °C
Screw backlash	Depends on lead (nominally ± .005 in)
System backlash	The screw, motor and loaded mechanics will be the entire backlash in the motion axis.
Nut Material	POM with lubricating additive. Standard is a free-wheeling nut, and anti-backlash version is available.
Lifetime of screw and nut	Depends on load, speed, operating frequency and environment. [Typically more than 5 million cycles (150mm travel length)]

PHBL20 Series

Ambient Temperature	-20 °C ~ +50 °C
Temperature Rise	80 °C Max. (rated current, 2 phase on)
Dielectric Strength	500 VAC for one minute
Insulation Resistance	Class B (Class F also available)

Motor Specs

Model	Voltage	Current	Resistance	Inductance	Lead Wire	Motor Length	
	V/Ø	A/Ø	Ω/Ø	mH/Ø	Pin	inch	mm
PHBL20□30-4S05	2.5	0.5	5.0	1.2	4	1.1811	27.2
PHBL20□40-4S05	4.4	0.5	8.8	2.7	4	1.5748	38.1

Note: Non-captive type (N) or External type (E) is available, and please specify it with the blank box when ordering.

Lead Screw Specs

Lead Code	Screw Dia.		Lead		Trave /Step	
	inch	mm	inch	mm	inch	mm
AF	0.138	3.5052	0.012	0.3048	0.00006	0.001524
AA	0.138	3.5052	0.024	0.6096	0.00012	0.003048
B	0.138	3.5052	0.048	1.2192	0.00024	0.006096
G	0.138	3.5052	0.079	2.0	0.000395	0.01
M	0.138	3.5052	0.158	4.0	0.00079	0.02
T	0.138	3.5052	0.315	8.0	0.001575	0.04

Typical Dimension

Non-captive

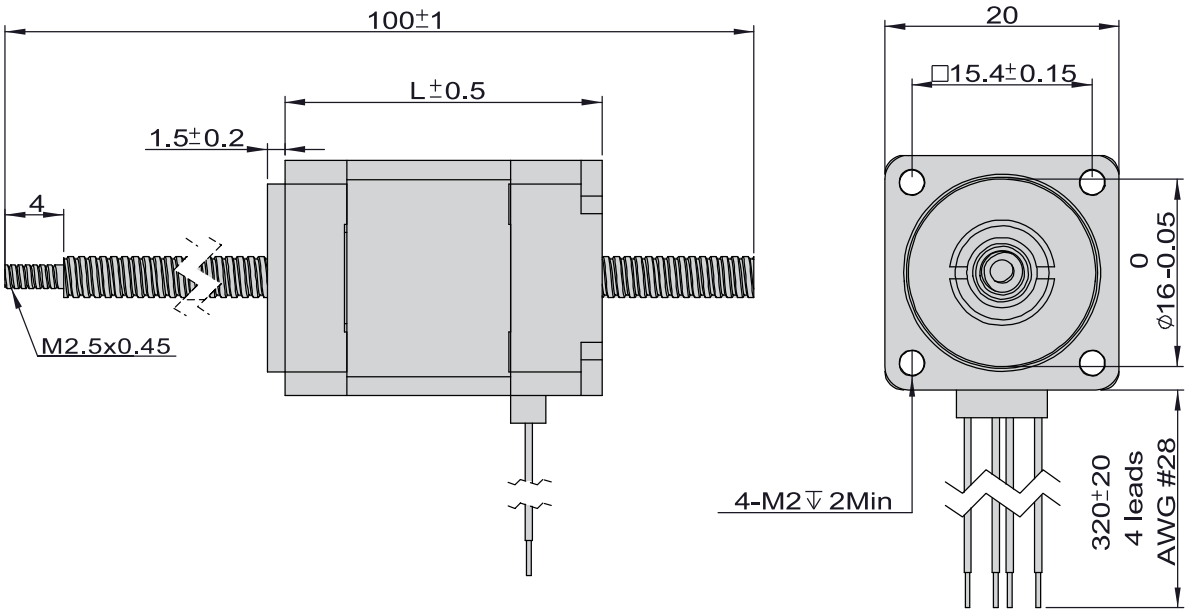

PHBL20 Series

External

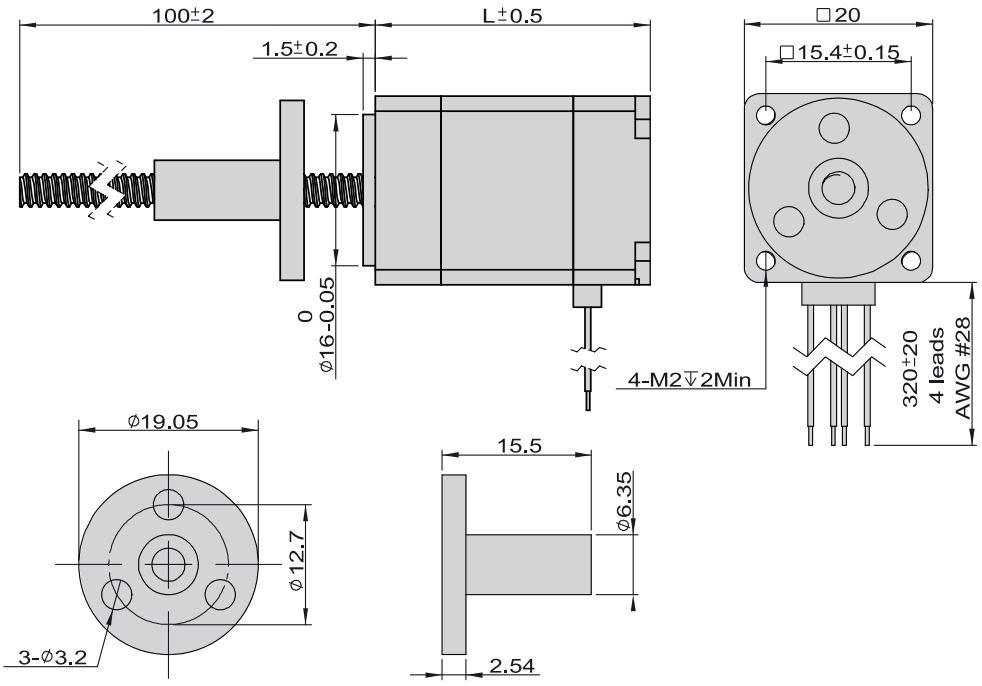

Captive

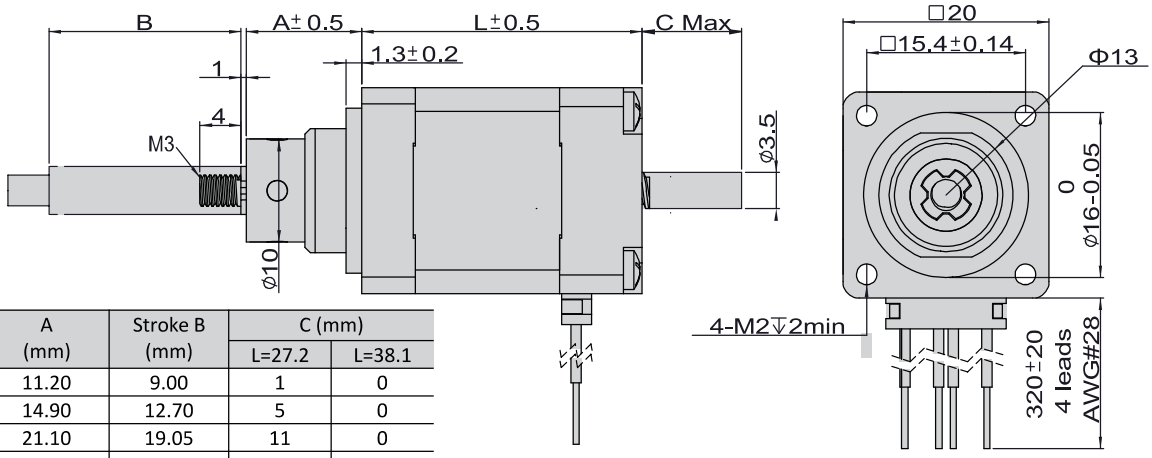

A (mm)	Stroke B (mm)	C (mm)	
		L=27.2	L=38.1
11.20	9.00	1	0
14.90	12.70	5	0
21.10	19.05	11	0
27.60	25.40	17	6
34.00	31.80	24	13
40.30	38.10	30	19

Anti-backlash Nut

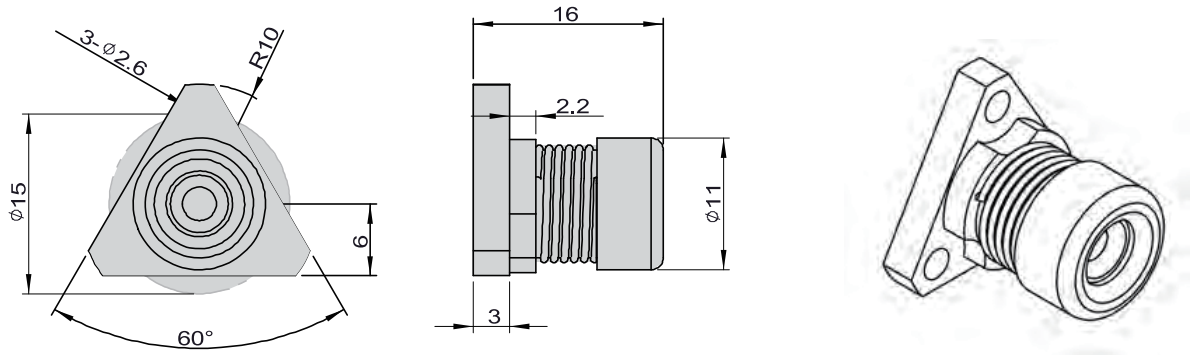

PHBL20 Series

Linear Performance Curves

Size 8 (20mm) Single Stack Speed Thrust Curves

Screw Diameter 3.5mm

Bipolar, Chopper Driver, 0.5 A RMS

(RECOMMENDED LOAD LIMIT 45N)

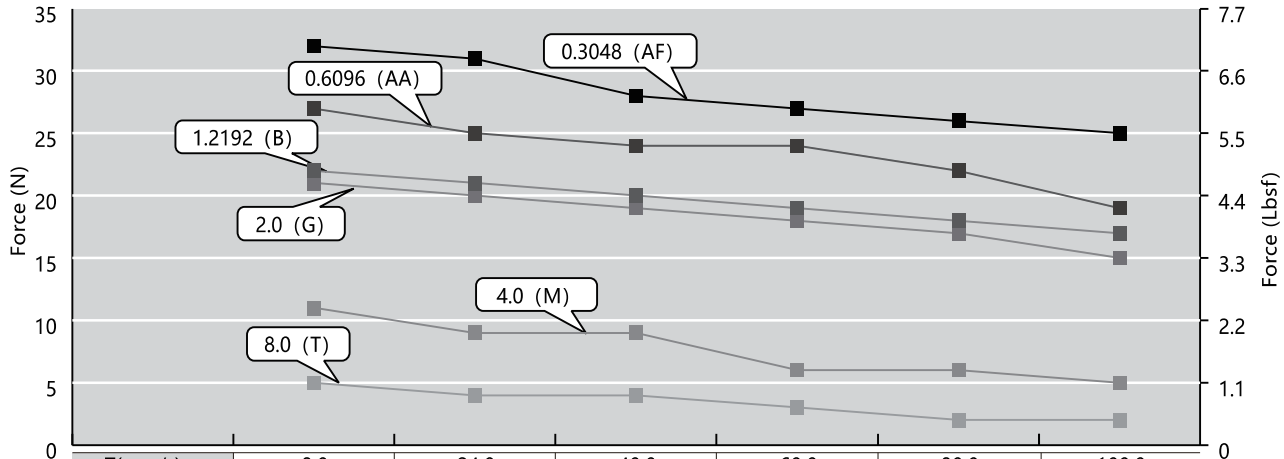

T(mm/s)	8.0	24.0	40.0	60.0	80.0	100.0
M(mm/s)	4.0	12.0	20.0	30.0	40.0	50.0
G(mm/s)	2.0	6.0	10.0	15.0	20.0	25.0
B(mm/s)	1.2	3.7	6.1	9.1	12.2	15.2
AA (mm/s)	0.6	1.8	3.0	4.6	6.1	7.6
AF(mm/s)	0.3	0.9	1.5	2.3	3.0	3.8
RPM r/min	60	180	300	450	600	750
PPS	200	600	1000	1500	2000	2500

Size 8 (20mm) Double Stack Speed Thrust Curves

Screw Diameter 3.5mm

Bipolar, Chopper Driver, 0.5 A RMS

(RECOMMENDED LOAD LIMIT 45N)

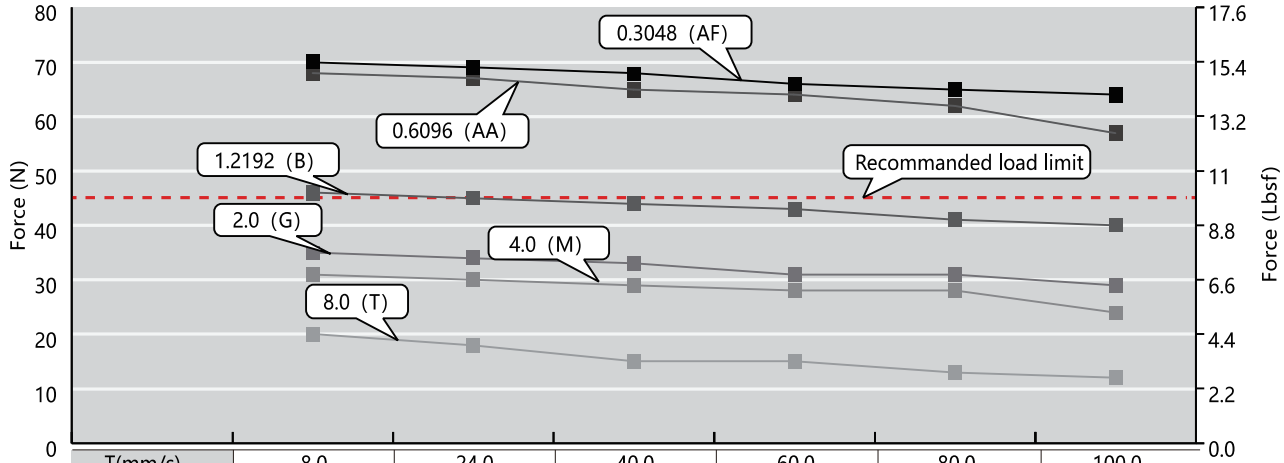

T(mm/s)	8.0	24.0	40.0	60.0	80.0	100.0
M(mm/s)	4.0	12.0	20.0	30.0	40.0	50.0
G(mm/s)	2.0	6.0	10.0	15.0	20.0	25.0
B(mm/s)	1.2	3.7	6.1	9.1	12.2	15.2
AA (mm/s)	0.6	1.8	3.0	4.6	6.1	7.6
AF(mm/s)	0.3	0.9	1.5	2.3	3.0	3.8
RPM r/min	60	180	300	450	600	750
PPS	200	600	1000	1500	2000	2500

PHBL28 Series

Ambient Temperature	-20 °C ~ +50 °C
Temperature Rise	80 °C Max. (rated current, 2 phase on)
Dielectric Strength	500 VAC for one minute
Insulation Resistance	Class B (Class F also available)

Motor Specs

Model	Voltage	Current	Resistance	Inductance	Lead Wire	Motor Length	
	V/Ø	A/Ø	Ω/Ø	mH/Ø	Pin	inch	mm
PHBL28□34-4S05	4.5	0.5	9.1	6.0	4	1.3386	33.3
PHBL28□34-4S10	2.2	1.0	2.2	1.5	4	1.3386	33.3
PHBL28□45-4S95	3.9	0.95	4.1	4.0	4	1.7717	45.0

Note: Non-captive type (N) or External type (E) is available, and please specify it with the blank box when ordering.

Lead Screw Specs

Lead Code	Screw Dia.		Lead		Travel/Step	
	inch	mm	inch	mm	inch	mm
A	0.188	4.7752	0.025	0.635	0.000125	0.003175
D	0.188	4.7752	0.05	1.27	0.00025	0.00635
K	0.188	4.7752	0.1	2.54	0.0005	0.0127
R	0.188	4.7752	0.2	5.08	0.001	0.0254
X	0.188	4.7752	0.4	10.16	0.002	0.0508

Typical Dimension

Non-captive

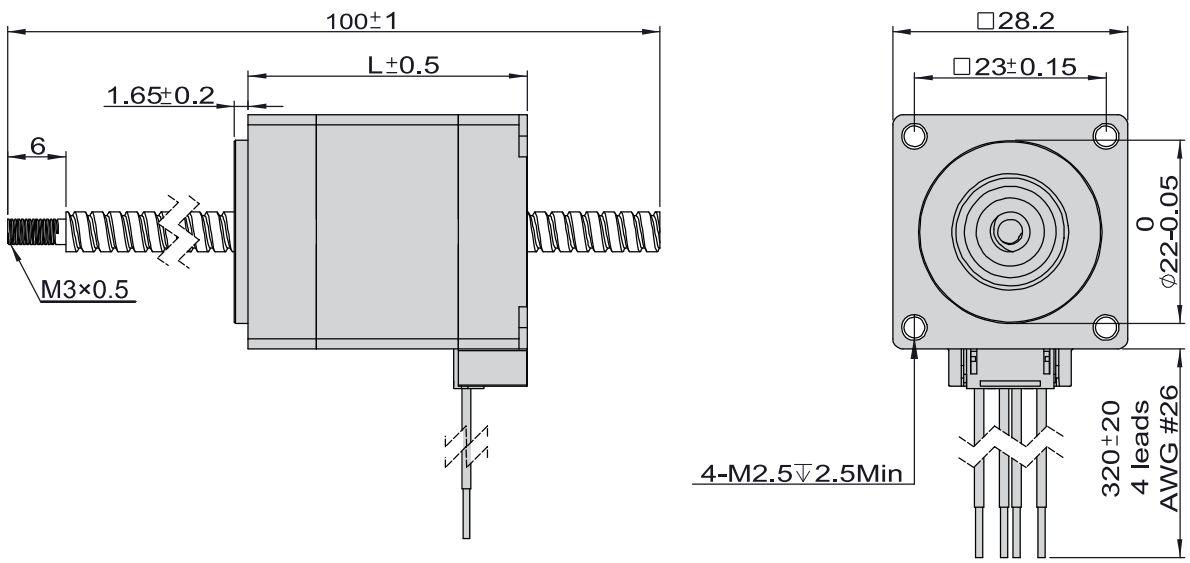

PHBL28 Series

External

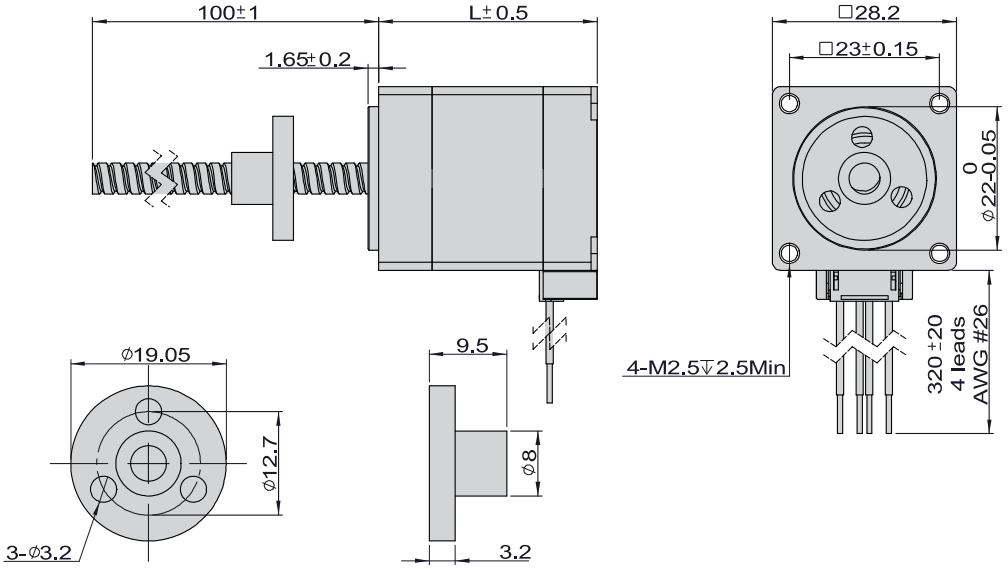

Captive

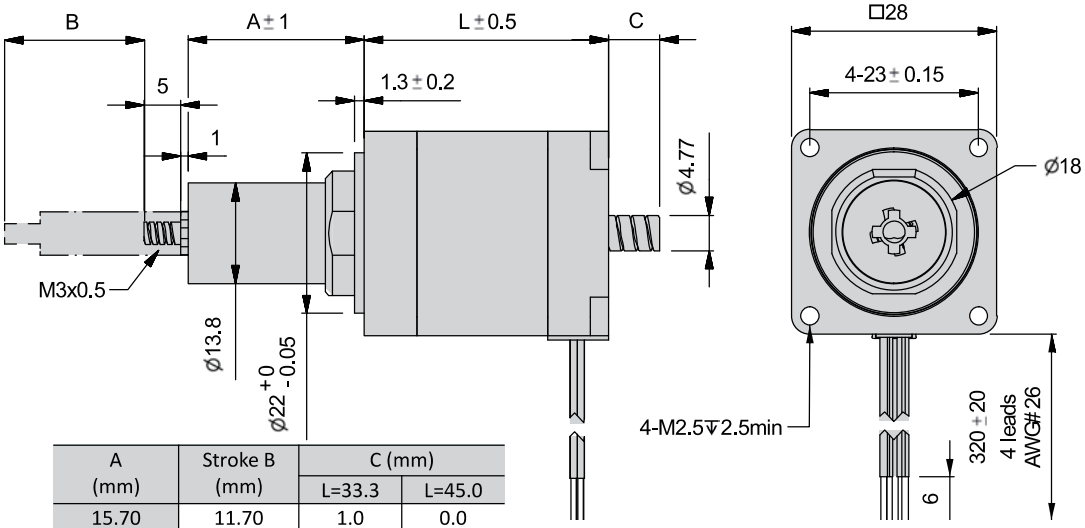

A (mm)	Stroke B (mm)	C (mm)	
		L=33.3	L=45.0
15.70	11.70	1.0	0.0
22.10	18.05	7.4	0.0
28.40	24.40	13.7	4.0
34.80	30.80	20.1	10.4
41.10	37.10	26.4	16.8
53.80	49.80	39.0	29.4
63.50	62.50	51.7	42.1

Anti-backlash Nut

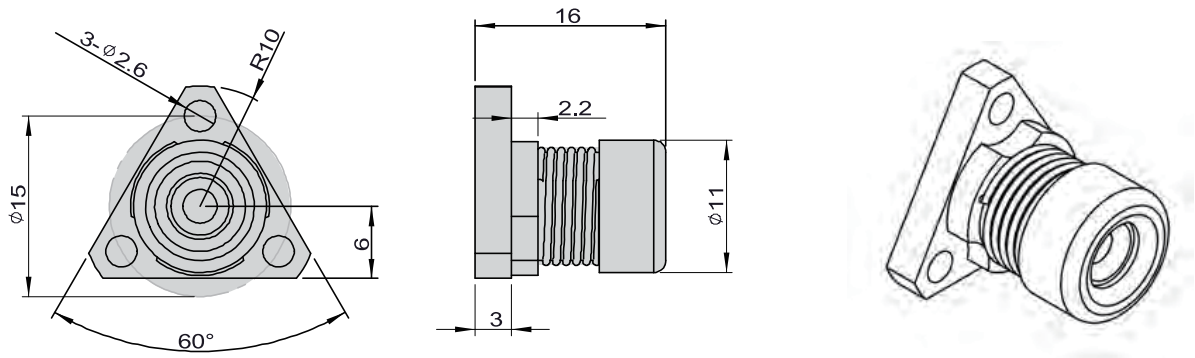

PHBL28 Series

Linear Performance Curves

Size 11 (28mm) Single Stack Speed Thrust Curves

Screw Diameter 4.77 mm

Bipolar, Chopper Driver, 1.0 A RMS

(RECOMMENDED LOAD LIMIT 115N)

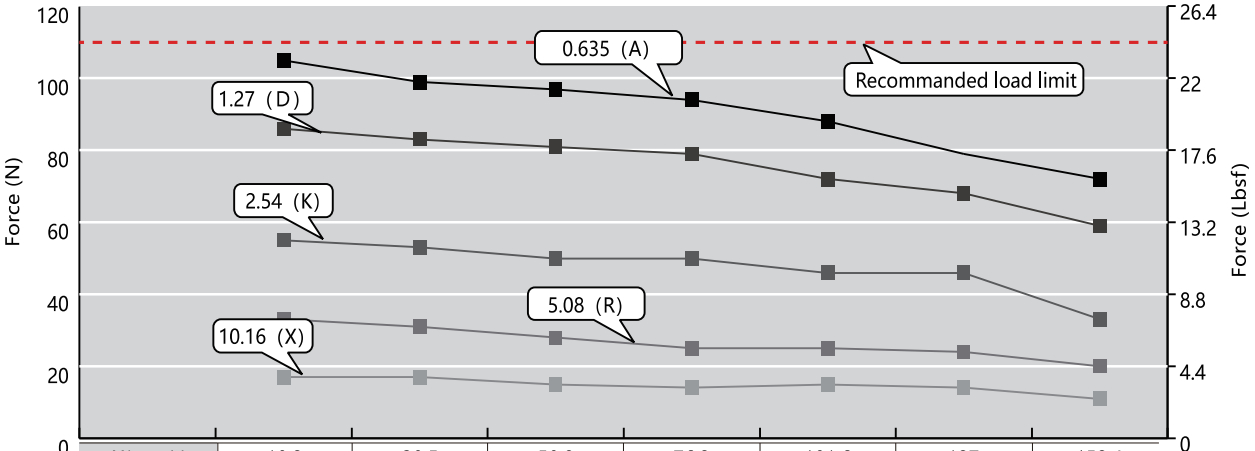

X(mm/s)	10.2	30.5	50.8	76.2	101.6	127	152.4
R(mm/s)	5.1	15.2	25.4	38.1	50.8	63.5	76.2
K(mm/s)	2.5	7.6	12.7	19.1	25.4	31.8	38.1
D(mm/s)	1.3	3.8	6.4	9.5	12.7	15.9	19.1
A(mm/s)	0.6	1.9	3.2	4.8	6.4	7.9	9.5
RPM r/min	60	180	300	450	600	750	900
PPS	200	600	1000	1500	2000	2500	3000

Size 11 (28mm) Double Stack Speed Thrust Curves

Screw Diameter 4.77 mm

Bipolar, Chopper Driver, 1.0 A RMS

(RECOMMENDED LOAD LIMIT 140N)

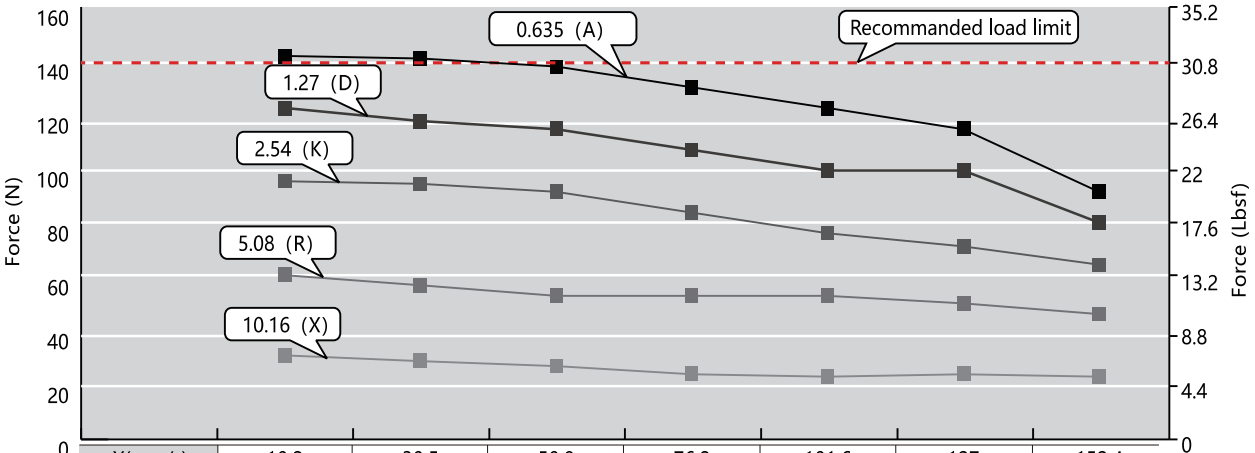

X(mm/s)	10.2	30.5	50.8	76.2	101.6	127	152.4
R(mm/s)	5.1	15.2	25.4	38.1	50.8	63.5	76.2
K(mm/s)	2.5	7.6	12.7	19.1	25.4	31.8	38.1
D(mm/s)	1.3	3.8	6.3	9.5	12.7	15.9	19.1
A(mm/s)	0.6	1.9	3.2	4.8	6.4	7.9	9.5
RPM r/min	60	180	300	450	600	750	900
PPS	200	600	1000	1500	2000	2500	3000

PHBL35 Series

Ambient Temperature	-20 °C ~ +50 °C
Temperature Rise	80 °C Max. (rated current, 2 phase on)
Dielectric Strength	500 VAC for one minute
Insulation Resistance	Class B (Class F also available)

Motor Specs

Model	Voltage	Current	Resistance	Inductance	Lead Wire	Motor Length	
	V/Ø	A/Ø	Ω/Ø	mH/Ø	Pin	inch	mm
PHBL35□34-4S05	6.6	0.5	13.2	14.0	4	1.3780	33.6
PHBL35□34-4S10	3.3	1.0	3.3	3.6	4	1.3780	33.6
PHBL35□34-4S15	2.2	1.5	1.5	1.6	4	1.3780	33.6
PHBL35□46-4S05	12.0	0.5	24.0	29.0	4	1.8504	45.6
PHBL35□46-4S10	6.0	1.0	6.0	7.2	4	1.8504	45.6
PHBL35□46-4S15	4.0	1.5	2.7	1.8	4	1.8504	45.6

Note: Non-captive type (N), External type (E) or Captive type (C) is available, and please specify it with the blank box when ordering.

Lead Screw Specs

Lead Code	Screw Dia.		Lead		Travel/Step @ 1.8Deg*		Travel/Step @ 0.9Deg*	
	inch	mm	inch	mm	inch	mm	inch	mm
AA	0.25	6.35	0.024	0.6096	0.00012	0.003	0.00006	0.0015
AB	0.25	6.35	0.039	1.0000	0.00020	0.005	0.00010	0.0025
B	0.25	6.35	0.048	1.2192	0.00024	0.006	0.00012	0.003
D	0.25	6.35	0.05	1.27	0.00025	0.006	0.00013	0.0032
F	0.25	6.35	0.063	1.6002	0.00032	0.008	0.00016	0.004
J	0.25	6.35	0.096	2.4384	0.00048	0.012	0.00024	0.0061
K	0.25	6.35	0.1	2.54	0.0005	0.013	0.00025	0.0064
L	0.25	6.35	0.125	3.175	0.0006	0.016	0.00031	0.0079
Q	0.25	6.35	0.192	4.8768	0.00096	0.024	0.00048	0.0122
AQ	0.218	5.56	0.192	4.8768	0.00096	0.024	0.00048	0.0122
S	0.25	6.35	0.25	6.35	0.00125	0.032	0.00061	0.0155
U	0.25	6.35	0.33	8.382	0.00167	0.042	0.0008	0.021
W	0.25	6.35	0.384	9.7536	0.00192	0.049	0.001	0.024
Y	0.25	6.35	0.5	12.7	0.0025	0.0635	0.00125	0.0318

*Values truncated

Typical Dimension

Non-captive

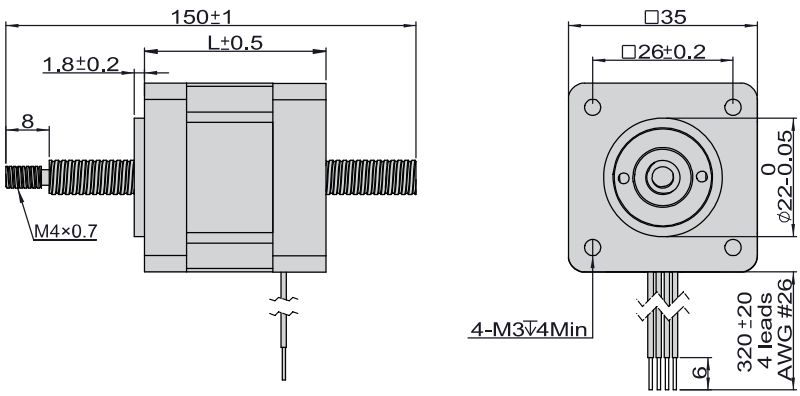

PHBL35 Series

External

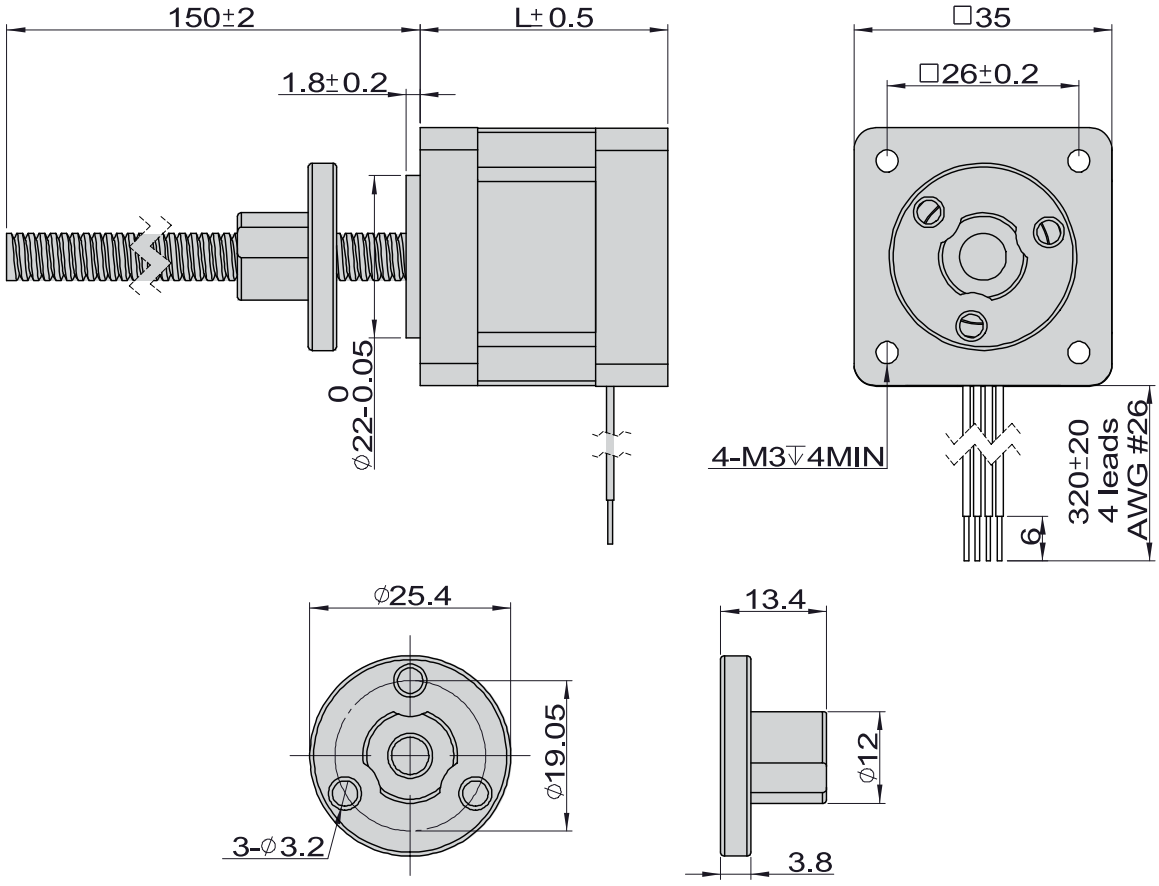

2Phase Hybrid Stepper Motor
3Phase Hybrid Stepper Motor
5Phase Hybrid Stepper Motor
Hybrid Stepper Gear Motor
Lead Screw Linear Actuator
Ball Screw Linear Actuator
IP65 Stepper Motor
Hollow Shaft Stepper Motor
Stepper Motor With Brake
Pancake Stepper Motor
PM Stepper Motor
Can-Stack Stepper Linear Actuator
PM Stepper Gear Motor
Stepper Motor Drive

PHBL35 Series

Captive

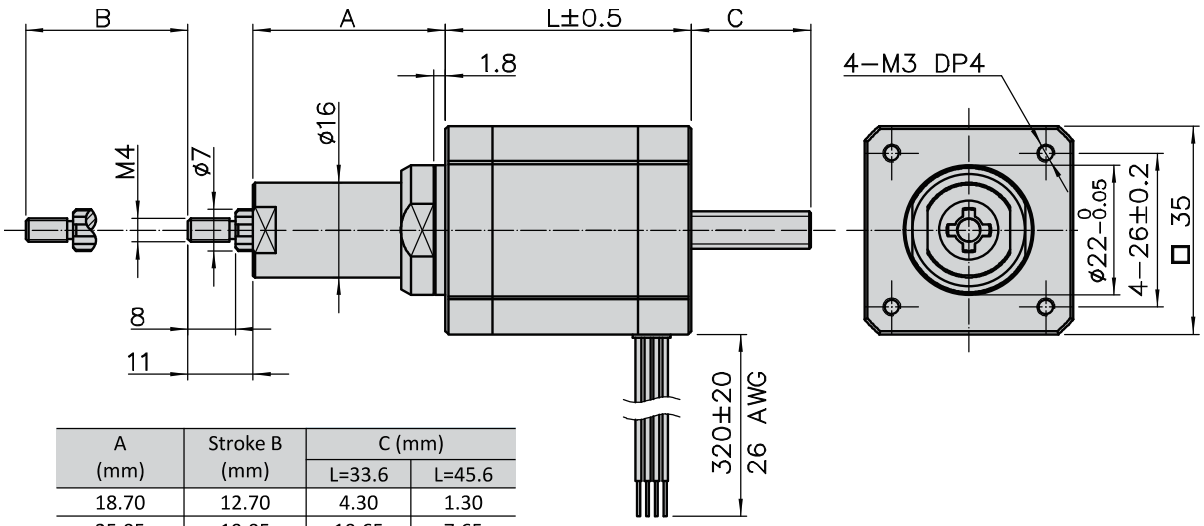

A (mm)	Stroke B (mm)	C (mm)	
		L=33.6	L=45.6
18.70	12.70	4.30	1.30
25.05	19.05	10.65	7.65
31.40	25.40	17.00	14.00
37.75	31.75	23.35	20.35
44.10	38.10	29.70	26.70
56.80	50.80	42.40	39.40
69.50	63.50	55.10	52.10

Anti-backlash Nut

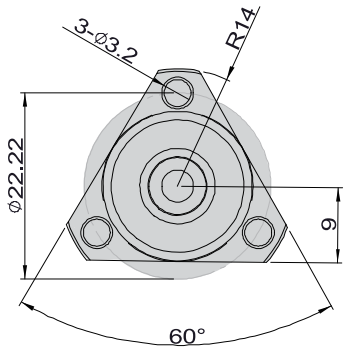

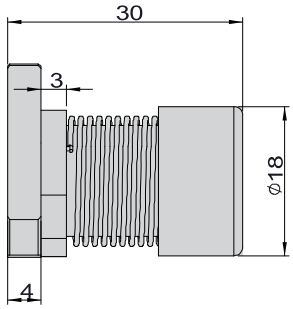

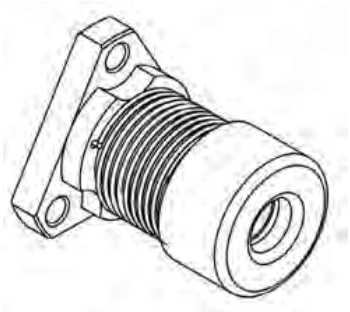

PHBL35 Series

Linear Performance Curves

Size 14 (35mm) Single Stack Speed Thrust Curves
Screw Diameter 6.35 mm
Bipolar, Chopper Driver, 1.0 A RMS
(RECOMMENDED LOAD LIMIT 230N)

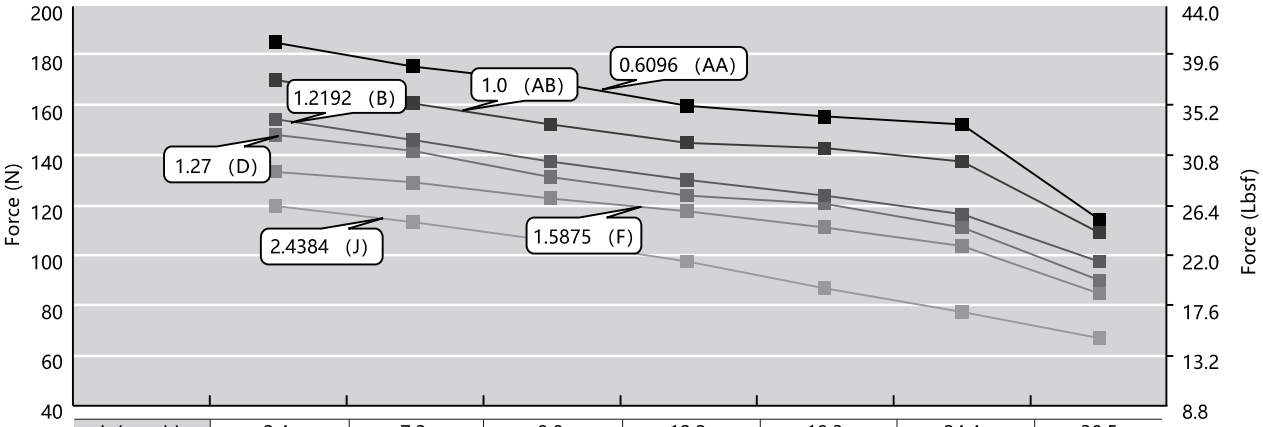

J (mm/s)	2.4	7.3	9.8	12.2	18.3	24.4	30.5
F (mm/s)	1.6	4.8	6.3	7.9	11.9	15.9	19.8
D (mm/s)	1.3	3.8	5.1	6.3	9.5	12.7	15.9
B (mm/s)	1.2	3.7	4.9	6.1	9.1	12.2	15.2
AB (mm/s)	1.0	3.0	4.0	5.0	7.5	10.0	12.5
AA (mm/s)	0.6	1.8	2.4	3.0	4.6	6.1	7.6
RPM r/min	60	180	240	300	450	600	750
PPS	200	600	800	1000	1500	2000	2500

Size 14 (35mm) Single Stack Speed Thrust Curves
Screw Diameter 6.35 mm
Bipolar, Chopper Driver, 1.0 A RMS
(RECOMMENDED LOAD LIMIT 230N)

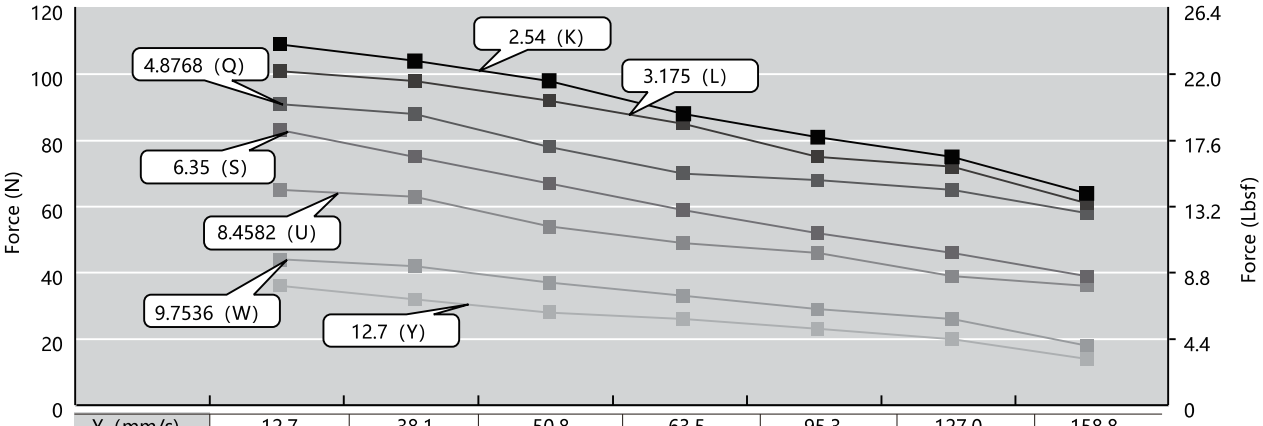

Y (mm/s)	12.7	38.1	50.8	63.5	95.3	127.0	158.8
W (mm/s)	9.8	29.3	39.0	48.8	73.2	97.5	121.9
U (mm/s)	8.5	25.3	33.8	42.3	63.4	84.6	105.7
S (mm/s)	6.4	19.1	25.4	31.8	47.6	63.5	79.4
Q (mm/s)	4.9	14.6	19.5	24.4	36.6	48.8	61.0
L (mm/s)	3.2	9.5	12.7	15.9	23.8	31.8	39.7
K (mm/s)	2.5	7.6	10.2	12.7	19.1	25.4	31.8
RPM r/min	60	180	240	300	450	600	750
PPS	200	600	800	1000	1500	2000	2500

PHBL35 Series

Size 14 (35mm) Double Stack Speed Thrust Curves
Screw Diameter 6.35 mm
Bipolar, Chopper Driver, 1.5 A RMS
(RECOMMENDED LOAD LIMIT 230N)

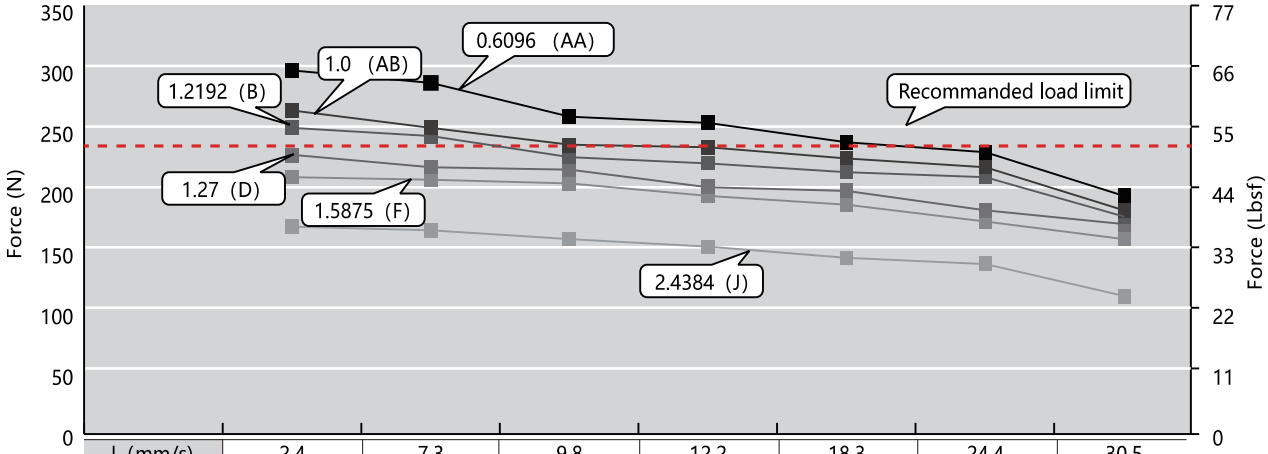

J (mm/s)	2.4	7.3	9.8	12.2	18.3	24.4	30.5
F (mm/s)	1.6	4.8	6.3	7.9	11.9	15.9	19.8
D (mm/s)	1.3	3.8	5.1	6.4	9.5	12.7	15.9
B (mm/s)	1.2	3.7	4.9	6.1	9.1	12.2	15.2
AB (mm/s)	1.0	3.0	4.0	5.0	7.5	10.0	12.5
AA (mm/s)	0.6	1.8	2.4	3.0	4.6	6.1	7.6
RPM r/min	60	180	240	300	450	600	750
PPS	200	600	800	1000	1500	2000	2500

Size 14 (35mm) Double Stack Speed Thrust Curves
Screw Diameter 6.35 mm
Bipolar, Chopper Driver, 1.5 A RMS
(RECOMMENDED LOAD LIMIT 230N)

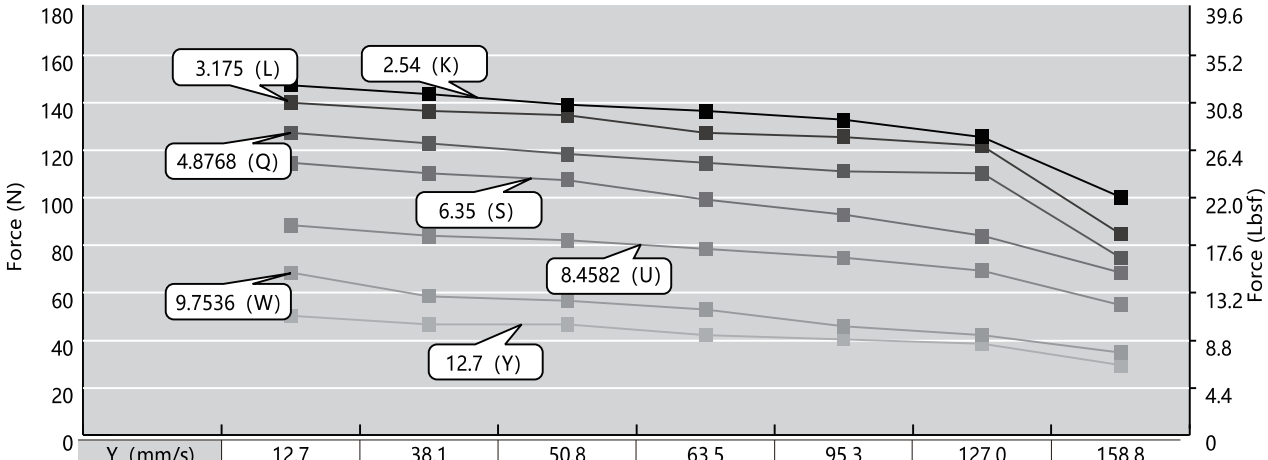

Y (mm/s)	12.7	38.1	50.8	63.5	95.3	127.0	158.8
W (mm/s)	9.8	29.3	39.0	48.8	73.2	97.5	121.9
U (mm/s)	8.5	25.3	33.8	42.3	63.4	84.6	105.7
S (mm/s)	6.3	19.1	25.4	31.8	47.6	63.5	79.4
Q (mm/s)	4.9	14.6	19.5	24.3	36.6	48.8	61.0
L (mm/s)	3.2	9.5	12.7	15.9	23.8	31.8	39.7
K (mm/s)	2.5	7.6	10.2	12.7	19.1	25.4	31.8
RPM r/min	60	180	240	300	450	600	750
PPS	200	600	800	1000	1500	2000	2500

PHBL42 Series

Ambient Temperature	-20 °C ~ +50 °C
Temperature Rise	80 °C Max. (rated current, 2 phase on)
Dielectric Strength	500 VAC for one minute
Insulation Resistance	Class B (Class F also available)

Motor Specs

Mode	Voltage	Current	Resistance	Inductance	Lead Wire	Motor Length	
	V/Ø	A/Ø	Ω/Ø	mH/Ø	Pin	inch	mm
PHBL42□35-4S05	7.2	0.5	14.4	19.8	4	1.3780	34.1
PHBL42□35-4S10	3.6	1.0	3.6	5.0	4	1.3780	34.1
PHBL42□35-4S15	2.4	1.5	1.6	2.2	4	1.3780	34.1
PHBL42□49-4S05	11.0	0.5	22.0	46.0	4	1.9291	48.1
PHBL42□49-4S12	4.5	1.2	3.8	8.0	4	1.9291	48.1
PHBL42□49-4S25	2.2	2.5	0.87	1.8	4	1.9291	48.1

Note: Non-captive type (N), External type (E) or Captive type (C) is available, and please specify it with the blank box when ordering.

Lead Screw Specs

Lead Code	Screw Dia.		Lead		Travel/Step @ 1.8Deg*		Travel/Step @ 0.9Deg*	
	inch	mm	inch	mm	inch	mm	inch	mm
AA	0.25	6.35	0.024	0.6096	0.00012	0.003	0.00006	0.0015
AB	0.25	6.35	0.039	1.0000	0.00020	0.005	0.00010	0.0025
B	0.25	6.35	0.048	1.2192	0.00024	0.006	0.00012	0.003
D	0.25	6.35	0.05	1.27	0.00025	0.006	0.00013	0.0032
F	0.25	6.35	0.063	1.6002	0.00032	0.008	0.00016	0.004
J	0.25	6.35	0.096	2.4384	0.00048	0.012	0.00024	0.0061
K	0.25	6.35	0.1	2.54	0.0005	0.013	0.00025	0.0064
L	0.25	6.35	0.125	3.175	0.0006	0.016	0.00031	0.0079
Q	0.25	6.35	0.192	4.8768	0.00096	0.024	0.00048	0.0122
AQ	0.218	5.56	0.192	4.8768	0.00096	0.024	0.00048	0.0122
S	0.25	6.35	0.25	6.35	0.00125	0.032	0.00061	0.0155
U	0.25	6.35	0.33	8.382	0.00167	0.042	0.0008	0.021
W	0.25	6.35	0.384	9.7536	0.00192	0.049	0.001	0.024
Y	0.25	6.35	0.5	12.7	0.0025	0.0635	0.00125	0.0318
M	0.315	8.0	0.175	4.0	0.00079	0.02	0.00039	0.01
T	0.315	8.0	0.315	8.0	0.00158	0.04	0.00079	0.02

*values truncated

PHBL42 Series

Typical Dimension

Non-captive

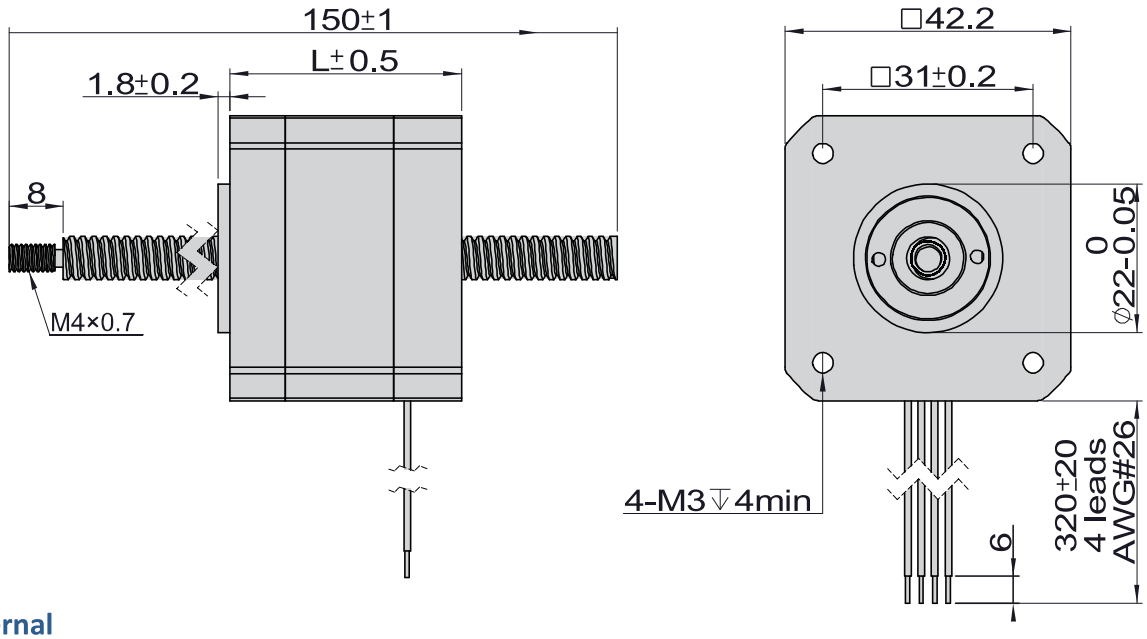

External

Dia. 6.35mm Lead Screw

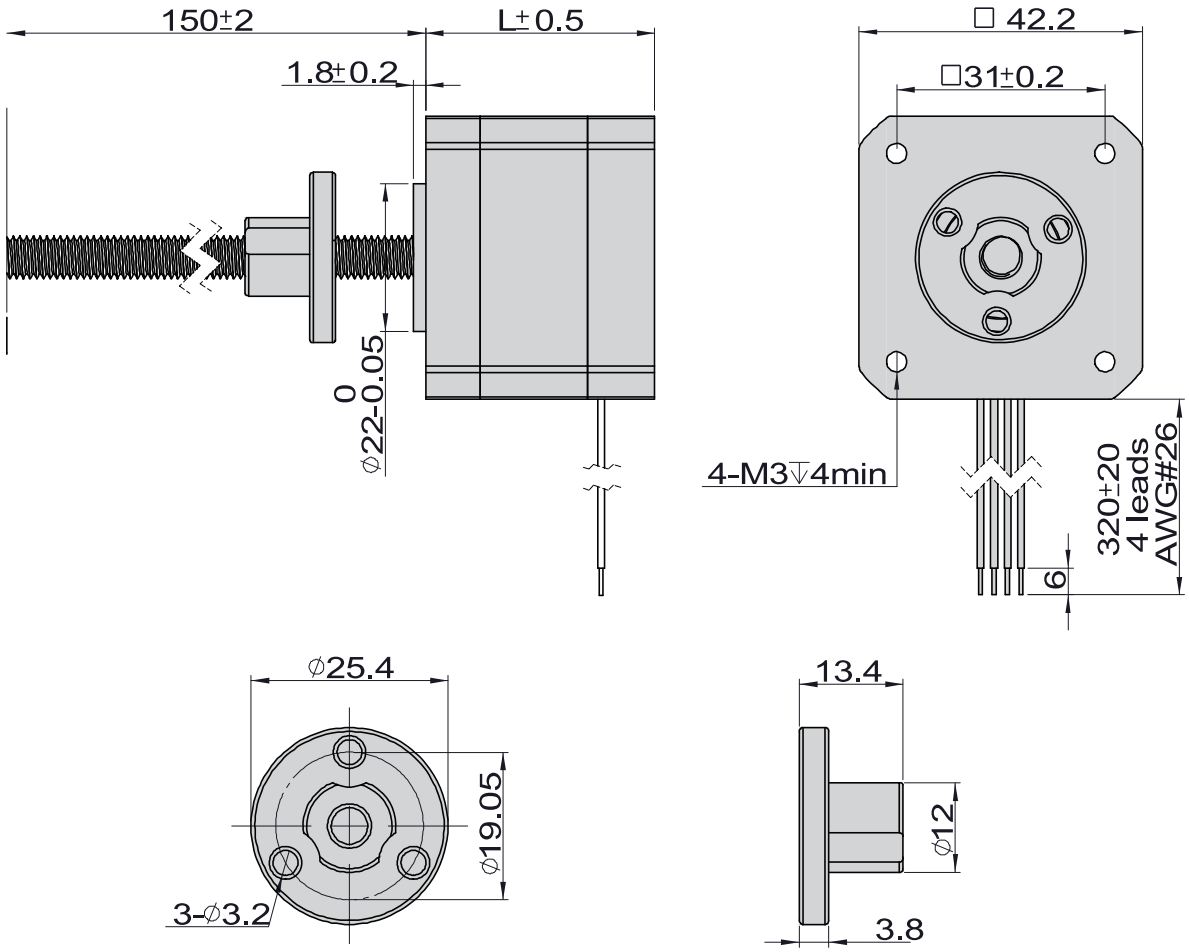

PHBL42 Series

2Phase Hybrid Stepper Motor
3Phase Hybrid Stepper Motor
5Phase Hybrid Stepper Motor
Hybrid Stepper Gear Motor
Lead Screw Linear Actuator
Ball Screw Linear Actuator
IP65 Stepper Motor
Hollow Shaft Stepper Motor
Stepper Motor With Brake
Pancake Stepper Motor
PM Stepper Motor
Can-Stack Stepper Linear Actuator
PM Stepper Gear Motor
Stepper Motor Drive

Captive

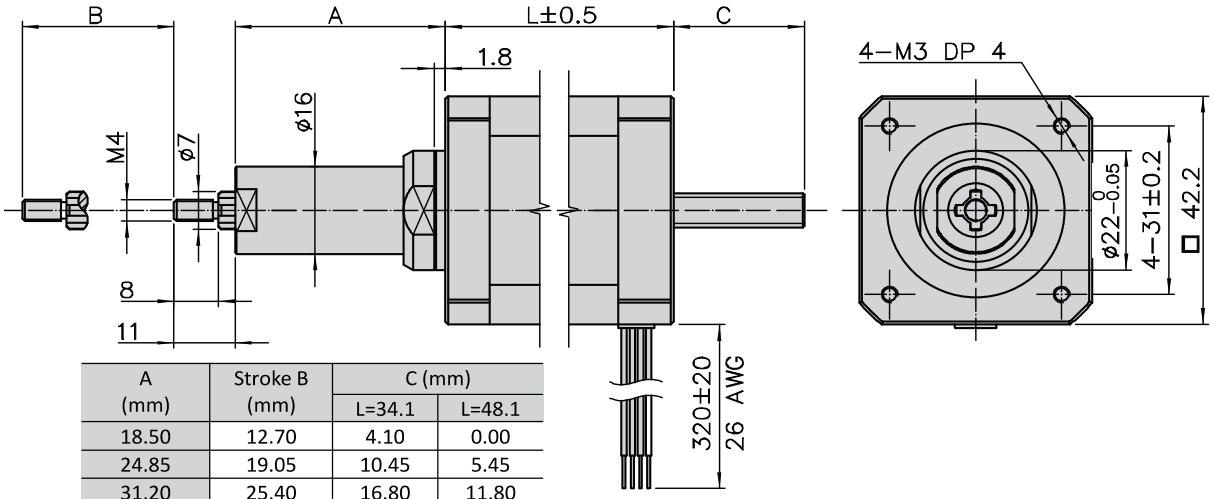

A (mm)	Stroke B (mm)	C (mm)	
		L=34.1	L=48.1
18.50	12.70	4.10	0.00
24.85	19.05	10.45	5.45
31.20	25.40	16.80	11.80
37.55	31.75	23.15	18.15
43.90	38.10	29.50	24.50
56.60	50.80	42.20	37.20
69.30	63.50	54.90	49.90

Anti-backlash Nut

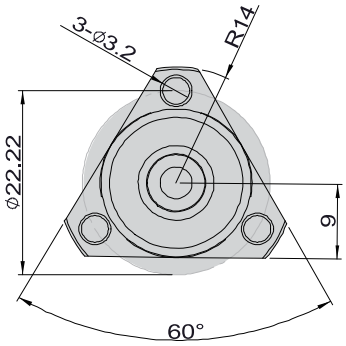

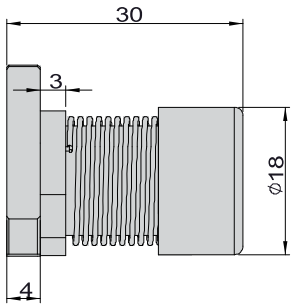

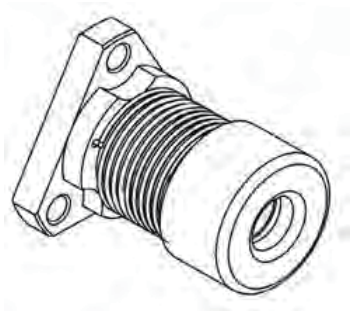

PHBL42 Series

Linear Performance Curves

Size 17 (42mm) Single Stack Speed Thrust Curves

Screw Diameter 6.35 mm

Bipolar, Chopper Driver, 1.0 A RMS

(RECOMMENDED LOAD LIMIT 230N)

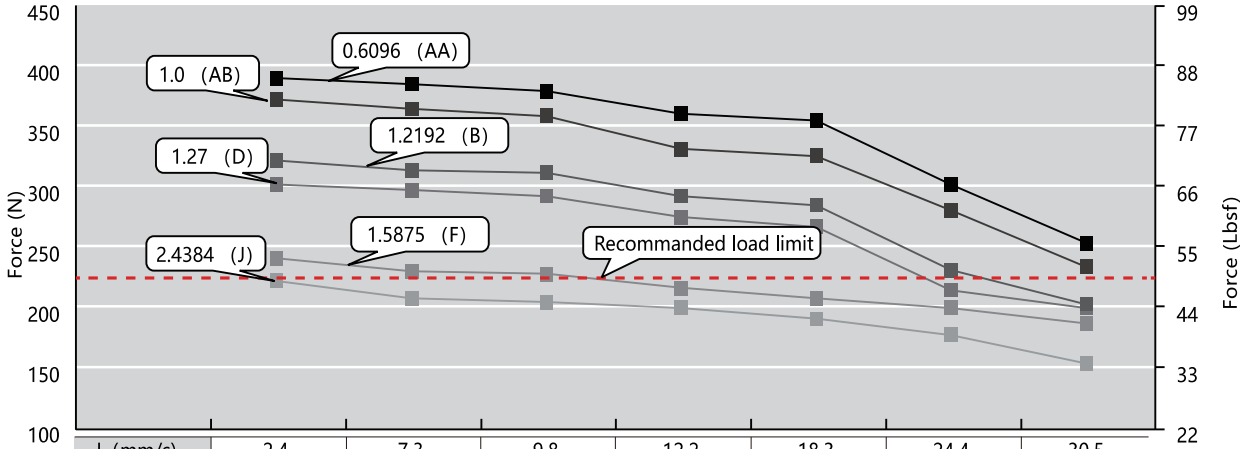

J (mm/s)	2.4	7.3	9.8	12.2	18.3	24.4	30.5
F (mm/s)	1.6	4.8	6.4	7.9	11.9	15.9	19.8
D (mm/s)	1.3	3.8	5.1	6.4	9.5	12.7	15.9
B (mm/s)	1.2	3.7	4.9	6.1	9.1	12.2	15.24
AB (mm/s)	1.0	3.0	4.0	5.0	7.5	10.0	12.5
AA (mm/s)	0.6	1.8	2.4	3.0	4.6	6.1	7.6
RPM r/min	60	180	240	300	450	600	750
PPS	200	600	800	1000	1500	2000	2500

Size 17 (42mm) Single Stack Speed Thrust Curves

Screw Diameter 6.35 mm

Bipolar, Chopper Driver, 1.0 A RMS

(RECOMMENDED LOAD LIMIT 230N)

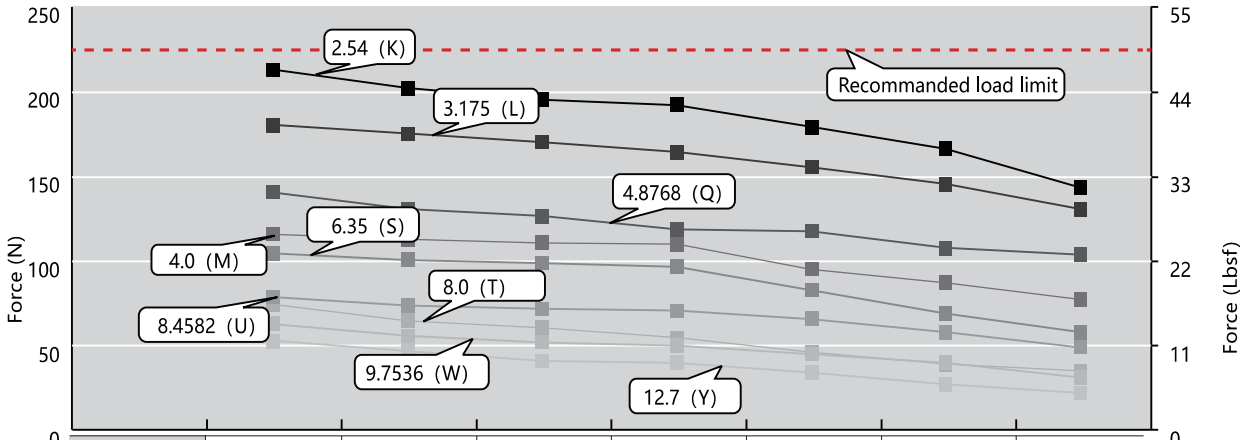

Y (mm/s)	12.7	38.1	50.8	63.5	95.3	127	158.8
W (mm/s)	9.8	29.3	39.0	48.8	73.2	97.5	121.9
U (mm/s)	8.5	25.3	33.8	42.3	63.4	84.6	105.7
T (mm/s)	8.0	24.0	32.0	40.0	60.0	80.0	100.0
S (mm/s)	6.4	19.1	25.4	31.8	47.6	63.5	79.4
Q (mm/s)	4.9	14.6	19.5	24.4	36.6	48.8	61.0
M (mm/s)	4.0	12.0	16.0	20.0	30.0	40.0	50.0
L (mm/s)	3.2	9.5	12.7	15.9	23.8	31.8	39.7
K (mm/s)	2.5	7.6	10.2	12.7	19.1	25.4	31.8
RPM r/min	60	180	240	300	450	600	750
PPS	200	600	800	1000	1500	2000	2500

PHBL42 Series

Size 17 (42mm) Double Stack Speed Thrust Curve

Screw Diameter 6.35 mm

Bipolar, Chopper Driver, 1.5 A RMS

(RECOMMENDED LOAD LIMIT 320N)

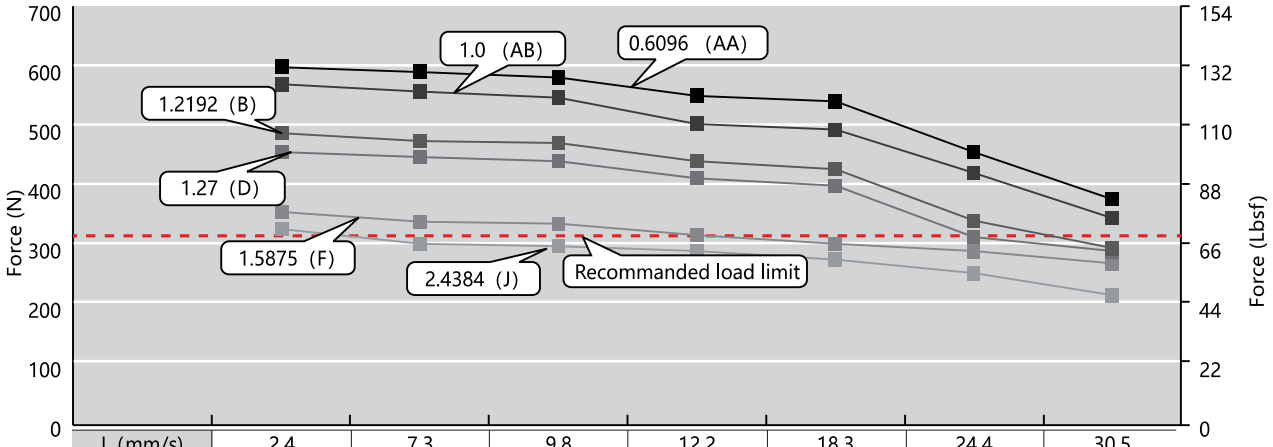

J (mm/s)	2.4	7.3	9.8	12.2	18.3	24.4	30.5
F (mm/s)	1.6	4.8	6.3	7.9	11.9	15.9	19.8
D (mm/s)	1.3	3.8	5.1	6.4	9.5	12.7	15.9
B (mm/s)	1.2	3.7	4.9	6.1	9.1	12.2	15.2
AB (mm/s)	1.0	3.0	4.0	5.0	7.5	10.0	12.5
AA (mm/s)	0.6	1.8	2.4	3.0	4.6	6.1	7.6
RPM r/min	60	180	240	300	450	600	750
PPS	200	600	800	1000	1500	2000	2500

Size 17 (42mm) Double Stack Speed Thrust Curve

Screw Diameter 6.35 mm

Bipolar, Chopper Driver, 1.5 A RMS

(RECOMMENDED LOAD LIMIT 320N)

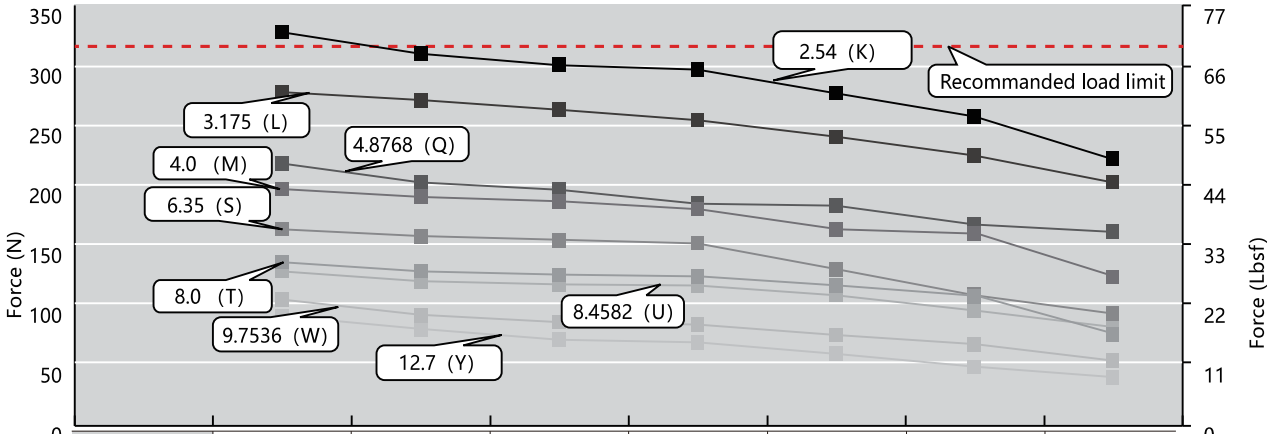

Y (mm/s)	12.7	38.1	50.8	63.5	95.3	127.0	158.8
W (mm/s)	9.8	29.3	39.0	48.8	73.2	97.5	121.9
U (mm/s)	8.5	25.3	33.8	42.3	63.4	84.6	105.7
T (mm/s)	8.0	24.0	32.0	40.0	60.0	80.0	100.0
S (mm/s)	6.4	19.1	25.4	31.8	47.6	63.5	79.4
Q (mm/s)	4.9	14.6	19.5	24.4	36.6	48.8	61.0
M (mm/s)	4.0	12.0	16.0	20.0	30.0	40.0	50.0
L (mm/s)	3.2	9.5	12.7	15.9	23.8	31.8	39.7
K (mm/s)	2.5	7.6	10.2	12.7	19.1	25.4	31.8
RPM r/min	60	180	240	300	450	600	750
PPS	200	600	800	1000	1500	2000	2500

PHBL57 Series

Ambient Temperature	-20 °C ~ +50 °C
Temperature Rise	80 °C Max. (rated current, 2 phase on)
Dielectric Strength	500 VAC for one minute
Insulation Resistance	Class B (Class F also available)

Motor Specs

Model	Voltage	Current	Resistance	Inductance	Lead Wire	Motor Length	
	V/Ø	A/Ø	Ω/Ø	mH/Ø	Pin	inch	mm
PHBL57□45-4S10	6.4	1.0	6.4	16.4	4	1.77	45
PHBL57□45-4S20	3.2	2.0	1.75	4.1	4	1.77	45
PHBL57□45-4S30	2.1	3.0	0.8	1.7	4	1.77	45
PHBL57□65-4S10	10.8	1.0	11.5	32.0	4	2.56	65
PHBL57□65-4S25	4.2	2.5	2.0	5.2	4	2.56	65
PHBL57□65-4S40	2.4	4.0	0.7	2.0	4	2.56	65

Note: Non-captive type (N), External type (E) or Captive type (C) is available, and please specify it with the blank box when ordering.

Lead Screw Specs

Lead Code	Screw Dia.		Lead		Travel/Step @ 1.8Deg*	Travel/Step @ 0.9Deg*
	inch	mm	inch	mm	mm	mm
G	0.315	10.000	0.079	2.0	0.01	0.005
A	0.375	9.525	0.025	0.635	0.0032	0.0016
D	0.375	9.525	0.05	1.27	0.0064	0.0032
F	0.375	9.525	0.0625	1.5875	0.0079	0.004
H	0.375	9.525	0.083	2.1167	0.0106	0.0053
K	0.375	9.525	0.1	2.54	0.0127	0.0064
L	0.375	9.525	0.125	3.175	0.0159	0.0079
P	0.375	9.525	0.167	4.2333	0.0212	0.0106
R	0.375	9.525	0.2	5.08	0.0254	0.0127
S	0.375	9.525	0.25	6.35	0.0318	0.0159
V	0.375	9.525	0.375	9.525	0.0476	0.0238
W	0.375	9.525	0.384	9.7536	0.0488	0.0244
X	0.375	9.525	0.4	10.16	0.0508	0.0254
Y	0.375	9.525	0.5	12.7	0.0635	0.0318
Z	0.375	9.525	1.0	25.4	0.127	0.0635

*values truncated

2Phase Hybrid Stepper Motor
3Phase Hybrid Stepper Motor
5Phase Hybrid Stepper Motor
Hybrid Stepper Gear Motor
Lead Screw Linear Actuator
Ball Screw Linear Actuator
IP65 Stepper Motor
Hollow Shaft Stepper Motor
Stepper Motor With Brake
Pancake Stepper Motor
PM Stepper Motor
Can-Stack Stepper Linear Actuator
PM Stepper Gear Motor
Stepper Motor Drive

PHBL57 Series

Typical Dimension

Non-captive

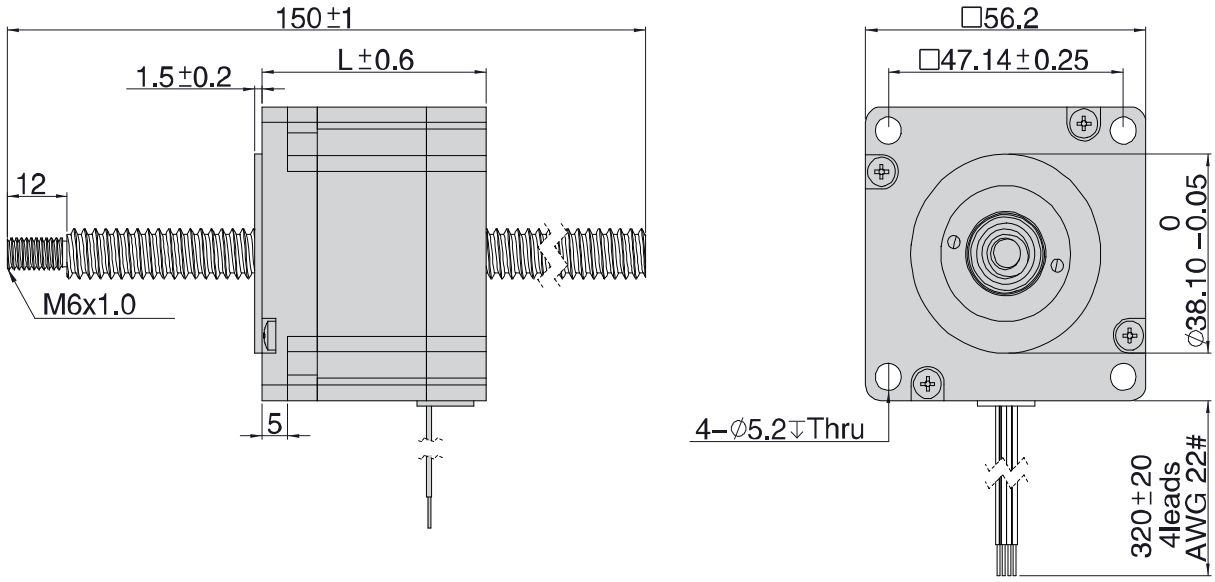

External

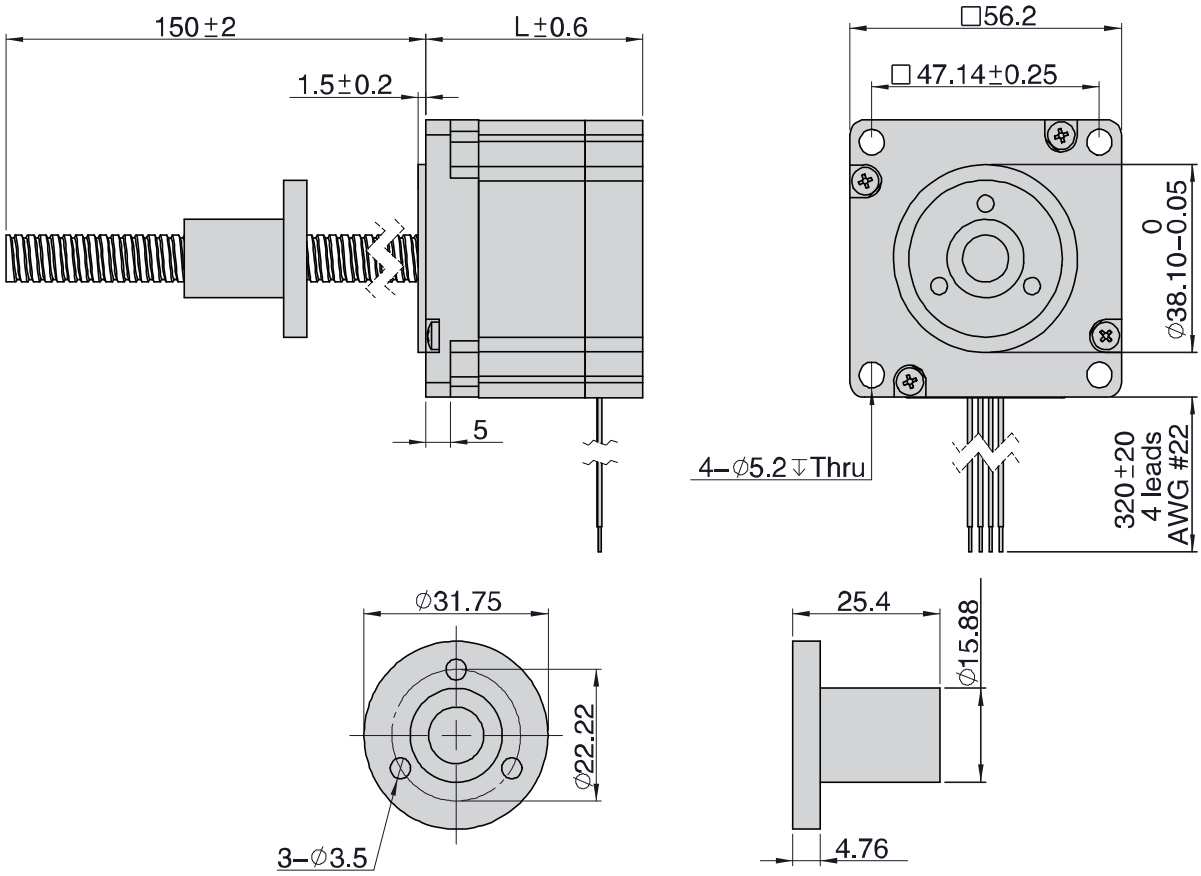

PHBL57 Series

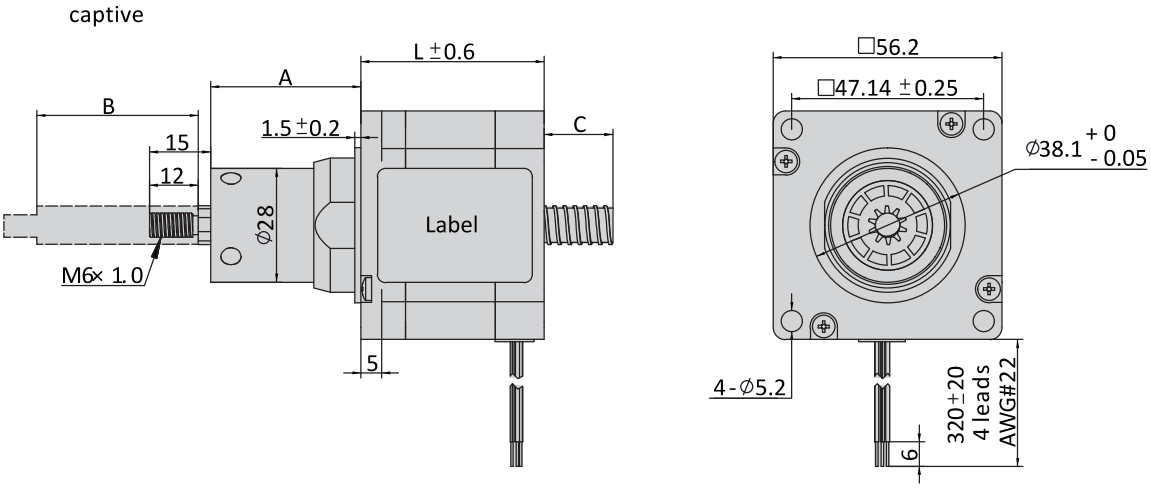

Stroke B (mm)	A (mm)	L (mm)	
12.70	45.70	Single Stack Motor 45mm	Double Stack Motor 65mm
19.05	52.05		
25.40	58.40		
31.80	64.80		
38.10	71.10		
50.80	83.80		
63.50	96.50		

Anti-backlash Nut

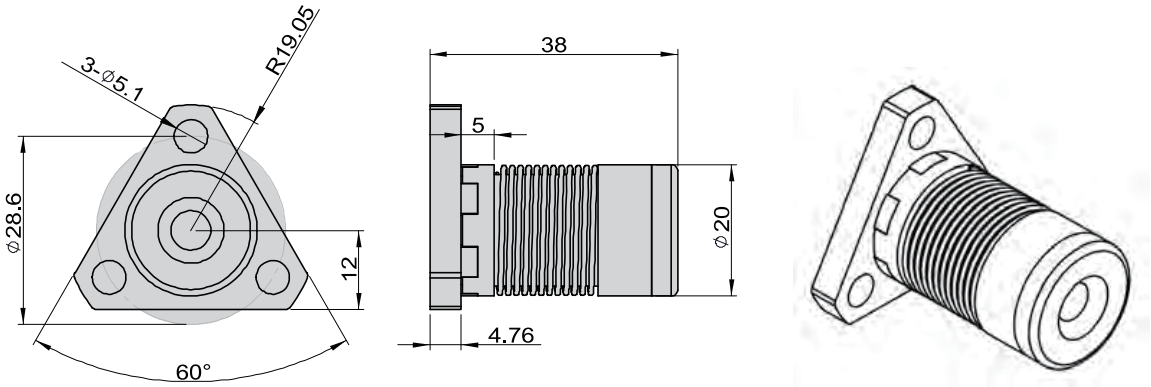

PHBL57 Series

Linear Performance Curves

Size 23 (57mm) Single Stack Speed Thrust Curves

Screw Diameter 9.525 mm

Bipolar, Chopper Driver, 2.0 A RMS

(RECOMMENDED LOAD LIMIT 910N)

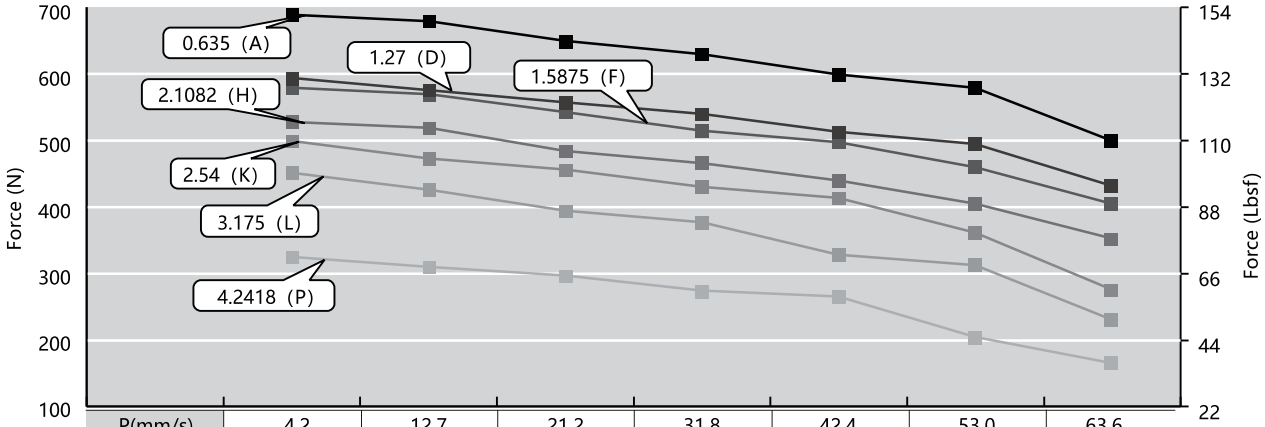

P(mm/s)	4.2	12.7	21.2	31.8	42.4	53.0	63.6
L(mm/s)	3.2	9.5	15.9	23.8	31.8	39.7	47.6
K(mm/s)	2.5	7.6	12.7	19.1	25.4	31.8	38.1
H(mm/s)	2.1	6.3	10.5	15.8	21.1	26.4	31.6
F(mm/s)	1.6	4.8	7.9	11.9	15.9	19.8	23.8
D(mm/s)	1.3	3.8	6.4	9.5	12.7	15.9	19.1
A(mm/s)	0.6	1.8	3.0	4.6	6.1	7.6	9.1
RPM r/min	60	180	300	450	600	750	900
PPS	200	600	1000	1500	2000	2500	3000

Size 23 (57mm) Single Stack Speed Thrust Curves

Screw Diameter 9.525 mm

Bipolar, Chopper Driver, 2.0 A RMS

(RECOMMENDED LOAD LIMIT 910N)

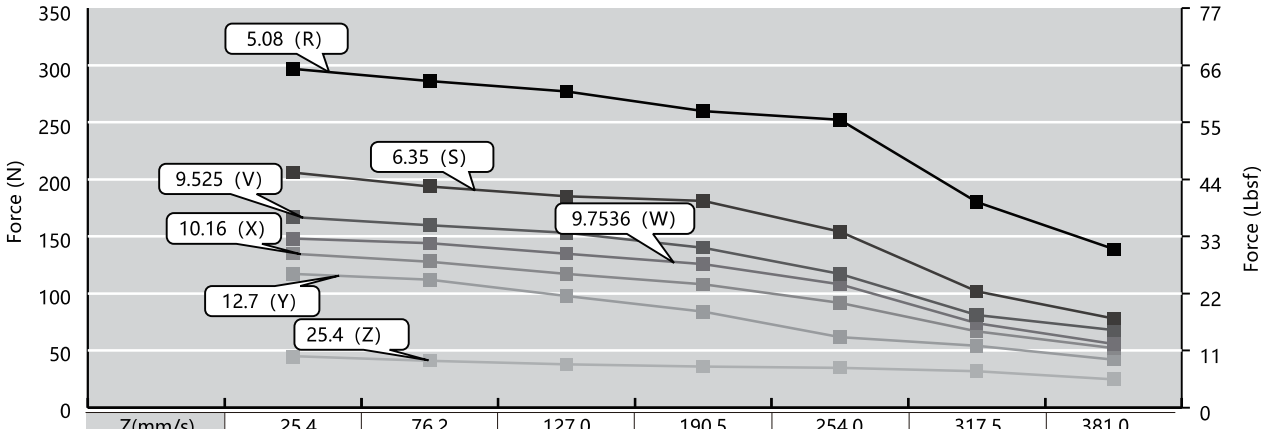

Z(mm/s)	25.4	76.2	127.0	190.5	254.0	317.5	381.0
Y(mm/s)	12.7	38.1	63.5	95.3	127.0	158.8	190.5
X(mm/s)	10.2	30.5	50.8	76.2	101.6	127.0	152.4
W(mm/s)	9.8	29.3	48.8	73.2	97.5	121.9	146.3
V(mm/s)	9.5	28.6	47.6	71.4	95.3	119.1	142.9
S(mm/s)	6.4	19.1	31.8	47.6	63.5	79.4	95.3
R(mm/s)	5.1	15.2	25.4	38.1	50.8	63.5	76.2
RPM r/min	60	180	300	450	600	750	900
PPS	200	600	1000	1500	2000	2500	3000

PHBL57 Series

Size 23 (57mm) Double Stack Speed Thrust Curves

Screw Diameter 9.525 mm

Bipolar, Chopper Driver, 4.0 A RMS

(RECOMMENDED LOAD LIMIT 910N)

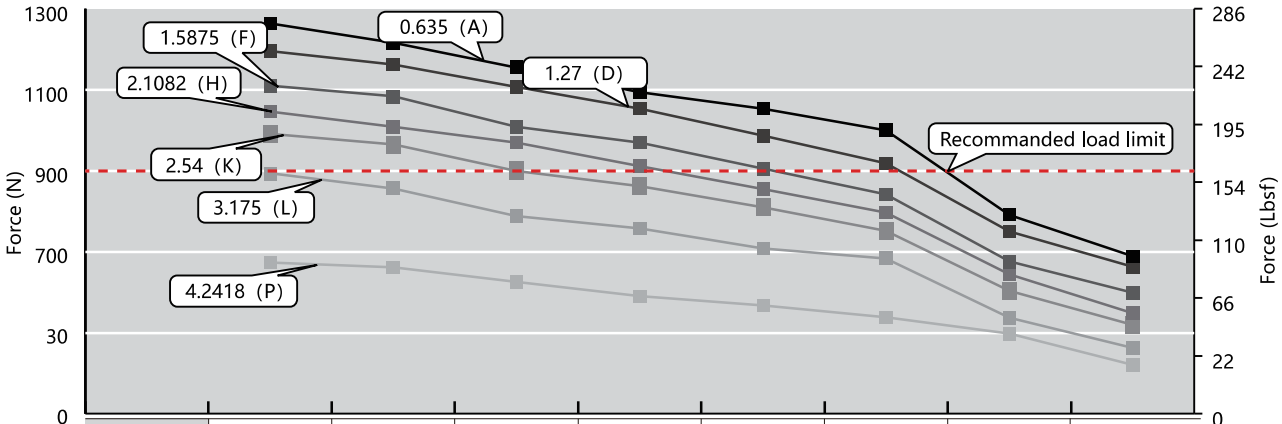

P(mm/s)	4.2	12.7	21.2	31.8	42.4	53.0	63.6	84.8
L(mm/s)	3.2	9.5	15.9	23.8	31.8	39.7	47.6	63.5
K(mm/s)	2.5	7.6	12.7	19.1	25.4	31.8	38.1	50.8
H(mm/s)	2.1	6.3	10.5	15.8	21.1	26.4	31.6	42.2
F(mm/s)	1.6	4.8	7.9	11.9	15.9	19.8	23.8	31.8
D(mm/s)	1.3	3.8	6.4	9.5	12.7	15.9	19.1	25.4
A(mm/s)	0.6	1.8	3.0	4.6	6.1	7.6	9.1	12.2
RPM r/min	60	180	300	450	600	750	900	1200
PPS	200	600	1000	1500	2000	2500	3000	4000

Size 23 (57mm) Double Stack Speed Thrust Curves

Screw Diameter 9.525 mm

Bipolar, Chopper Driver, 4.0 A RMS

(RECOMMENDED LOAD LIMIT 910N)

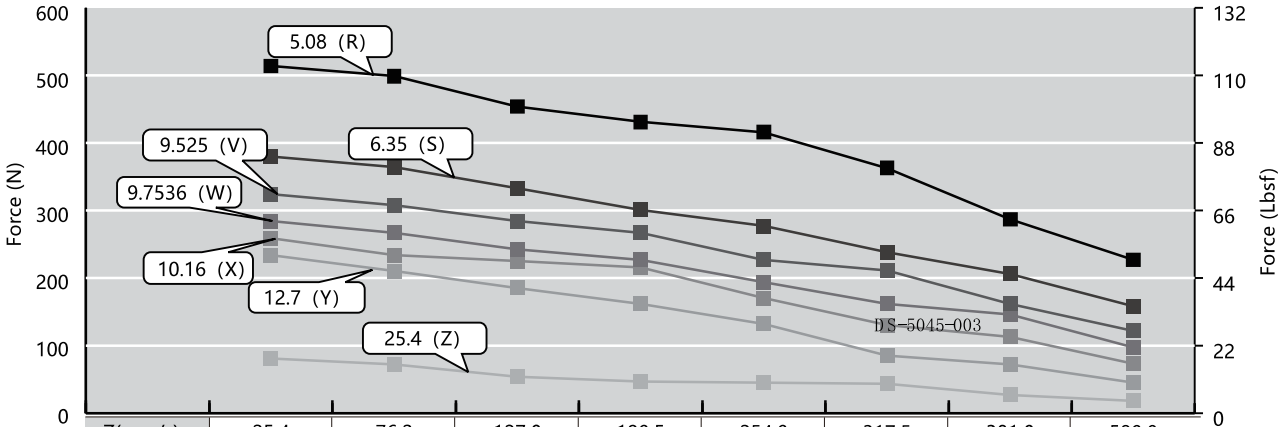

Z(mm/s)	25.4	76.2	127.0	190.5	254.0	317.5	381.0	580.0
Y(mm/s)	12.7	38.1	63.5	95.3	127.0	158.8	190.5	254.0
X(mm/s)	10.2	30.5	50.8	76.2	101.6	127.0	152.4	203.2
W(mm/s)	9.8	29.3	48.8	73.2	97.5	121.9	146.3	195.1
V(mm/s)	9.5	28.6	47.6	71.4	95.3	119.1	142.9	190.5
S(mm/s)	6.4	19.1	31.8	47.6	63.5	79.4	95.3	127.0
R(mm/s)	5.1	15.2	25.4	38.1	50.8	63.5	76.2	101.6
RPM r/min	60	180	300	450	600	750	900	1200
PPS	200	600	1000	1500	2000	2500	3000	4000

PHBL60 Series

Ambient Temperature	-20 °C ~ +50 °C
Temperature Rise	80 °C Max. (rated current, 2 phase on)
Dielectric Strength	500 VAC for one minute
Insulation Resistance	Class B (Class F also available)

Motor Specs

Model	Voltage	Current	Resistance	Inductance	Lead Wire	Motor Length	
	V/Ø	A/Ø	Ω/Ø	mH/Ø	Pin	inch	mm
PHBL60□47-4S20	3.0	2.0	1.5	3.9	4	1.9326	47
PHBL60□47-4S30	1.8	3.0	0.6	1.6	4	1.9326	47
PHBL60□47-4S40	1.6	4.0	0.4	0.9	4	1.9326	47
PHBL60□68-4S30	3.0	3.0	1.0	3.4	4	2.8085	68.3
PHBL60□68-4S45	2.4	4.0	0.6	1.9	4	2.8085	68.3
PHBL60□68-4S50	1.5	5.0	0.3	1.2	4	2.8085	68.3

Note: Non-captive type (N), External type (E) or Captive type (C) is available, and please specify it with the blank box when ordering.

Lead Screw Specs

Lead Code	Screw Dia.		Lead		Travel/Step @ 1.8Deg*		Travel/Step @ 0.9Deg*	
	inch	mm	inch	mm	inch	mm	inch	mm
A	0.375	9.525	0.025	0.635	0.00013	0.003	0.00006	0.0016
D	0.375	9.525	0.05	1.27	0.00025	0.006	0.00013	0.0032
F	0.375	9.525	0.063	1.6002	0.00032	0.008	0.00016	0.004
H	0.375	9.525	0.083	2.1082	0.00042	0.01	0.00021	0.0053
K	0.375	9.525	0.1	2.54	0.0005	0.012	0.00025	0.0064
L	0.375	9.525	0.125	3.175	0.00063	0.015	0.00031	0.0079
P	0.375	9.525	0.167	4.2418	0.00084	0.021	0.00042	0.0106
R	0.375	9.525	0.2	5.08	0.001	0.025	0.0005	0.0127
S	0.375	9.525	0.25	6.35	0.00125	0.031	0.00063	0.0159
V	0.375	9.525	0.375	9.525	0.00188	0.047	0.00094	0.0238
W	0.375	9.525	0.384	9.7536	0.00192	0.048	0.00096	0.0244
Y	0.375	9.525	0.5	12.7	0.0025	0.063	0.00125	0.0318
Z	0.375	9.525	1.0	25.4	0.005	0.127	0.0025	0.0635
MG	0.398	10.0	0.1	2.0	0.00039	0.01	0.00020	0.005
MM	0.315	8.0	0.125	4.0	0.00078	0.02	0.00039	0.01
MT	0.315	8.0	0.2	8.0	0.00158	0.04	0.00078	0.02

*values truncated

PHBL60 Series

Typical Dimension

Non-captive

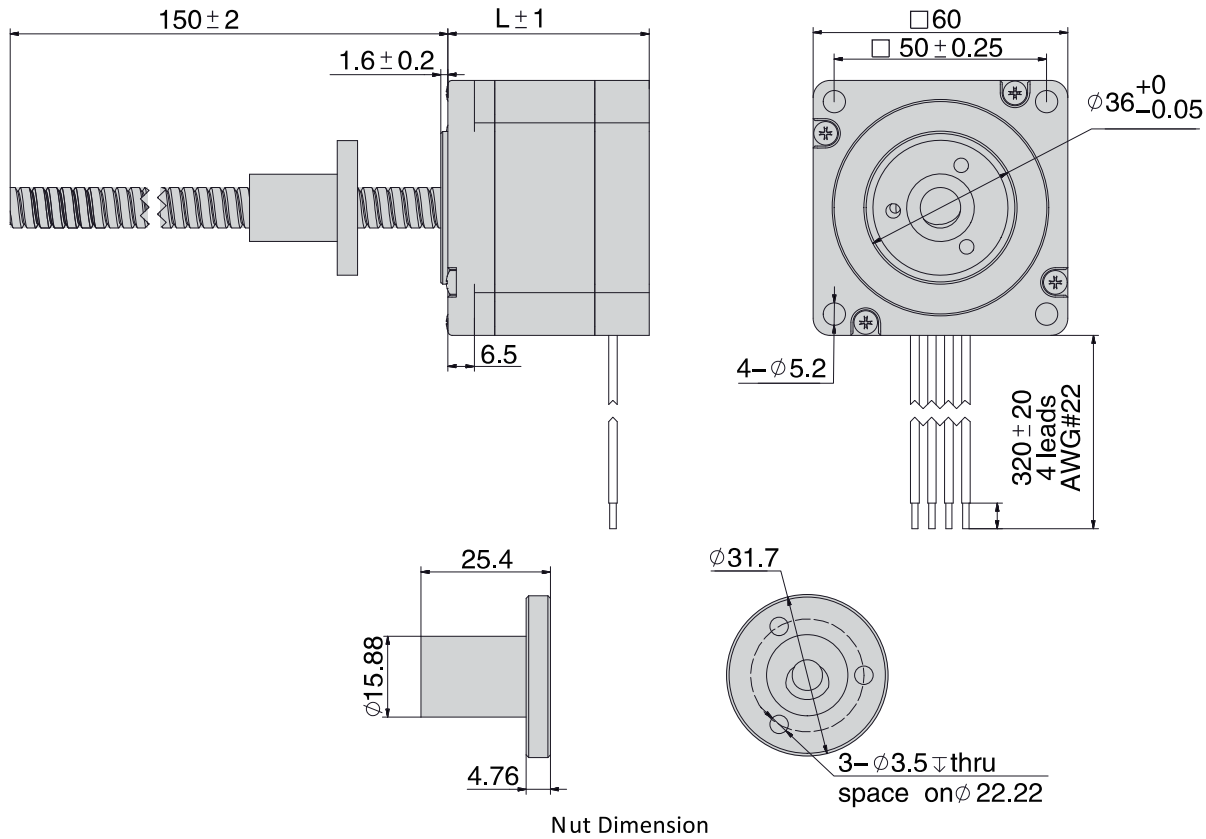

External Actuator

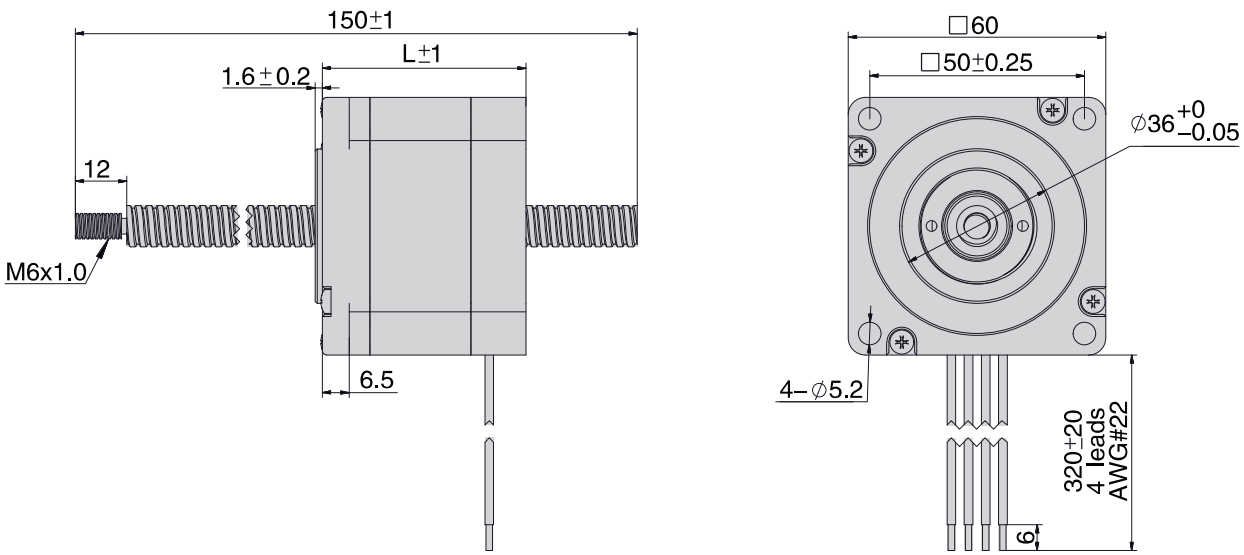

PHBL60 Series

captive

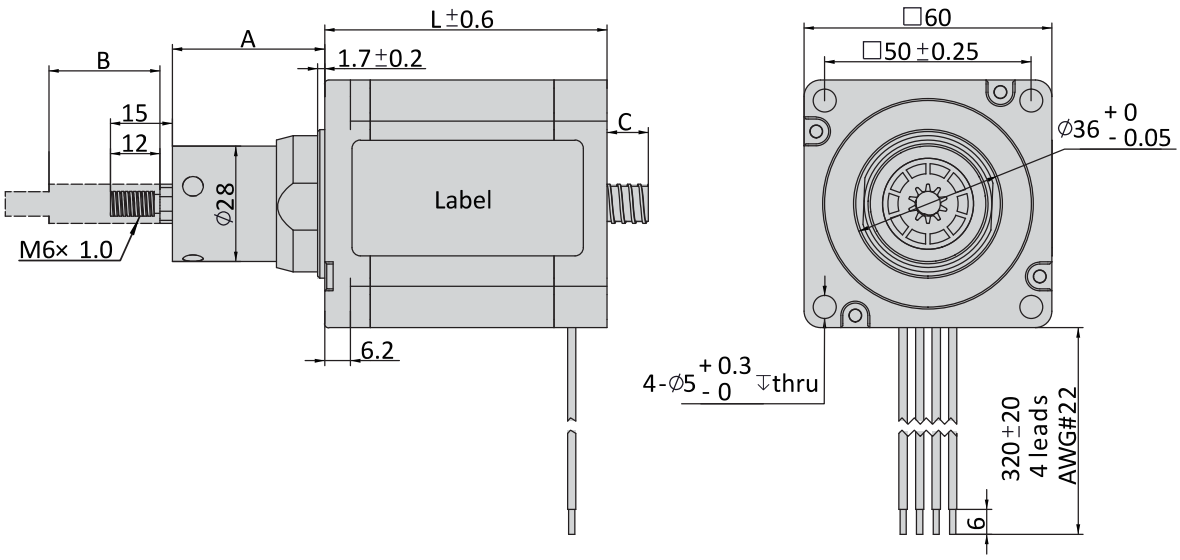

Stroke Specification

Stroke B (mm)	A (mm)	L (mm)	
12.70	24.20	Single Stack Motor 45mm	Double Stack Motor 65mm
19.05	30.55		
25.40	36.90		
31.80	43.25		
38.10	49.60		
50.80	62.30		
63.50	75.00		

PHBL60 Series

Size 24 (60mm) Performance Curves

Size 24 (60mm) Single Stack Speed Thrust Curves

Bipolar, Chopper Driver, 2.0 A Peak (RECOMMENDED LOAD LIMIT 1050N)

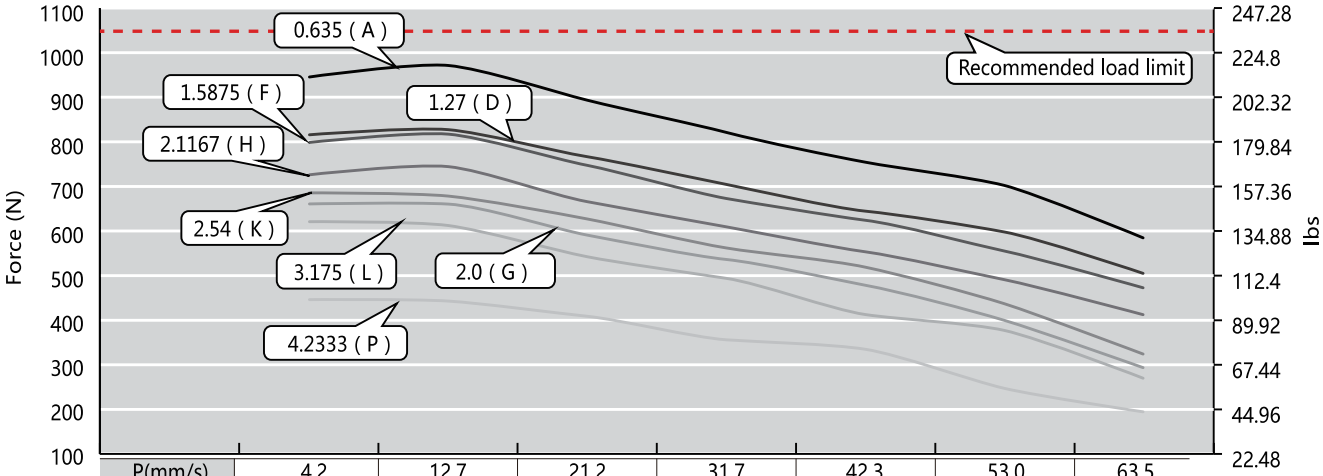

P(mm/s)	4.2	12.7	21.2	31.7	42.3	53.0	63.5
L(mm/s)	3.2	9.5	15.9	23.8	31.8	39.7	47.6
K(mm/s)	2.5	7.6	12.7	19.1	25.4	31.8	38.1
H(mm/s)	2.1	6.4	10.6	15.9	21.2	26.5	31.8
G(mm/s)	2.0	6.0	10.0	15.0	20.0	25.0	30.0
F(mm/s)	1.6	4.8	7.9	11.9	15.9	19.8	23.8
D(mm/s)	1.3	3.8	6.4	9.5	12.7	15.9	19.1
A(mm/s)	0.6	1.8	3.0	4.6	6.1	7.6	9.1
RPM r/min	60	180	300	450	600	750	900
PPS	200	600	1000	1500	2000	2500	3000

Size 24 (60mm) Single Stack Speed Thrust Curves

Bipolar, Chopper Driver, 2.0 A Peak (RECOMMENDED LOAD LIMIT 1050N)

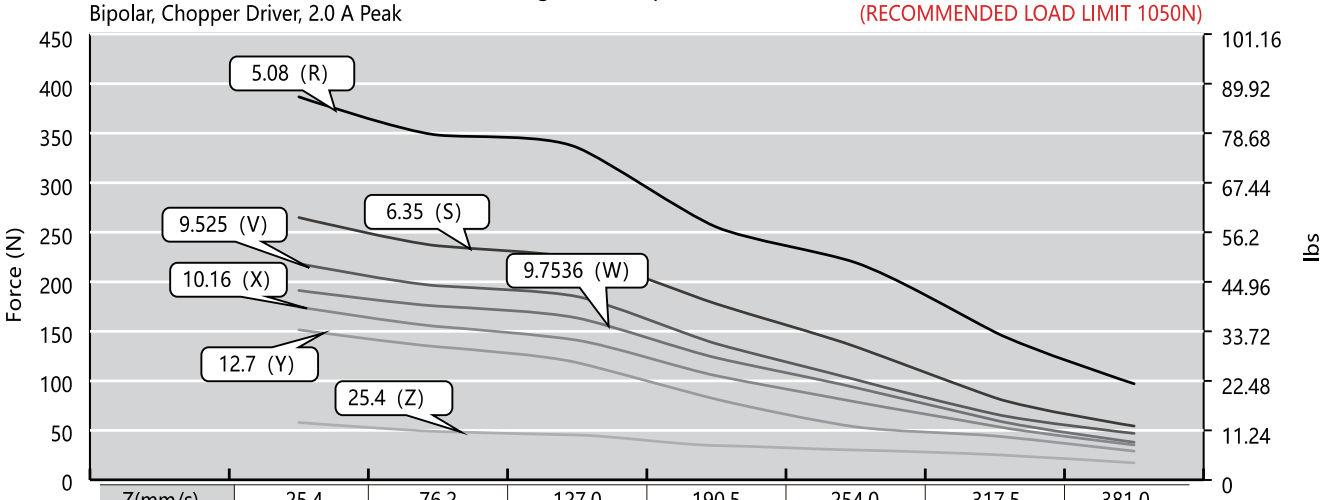

Z(mm/s)	25.4	76.2	127.0	190.5	254.0	317.5	381.0
Y(mm/s)	12.7	38.1	63.5	95.3	127.0	158.8	190.5
X(mm/s)	10.2	30.5	50.8	76.2	101.6	127.0	152.4
W(mm/s)	9.8	29.3	48.8	73.2	97.5	121.9	146.3
V(mm/s)	9.5	28.6	47.6	71.4	95.3	119.1	142.9
S(mm/s)	6.4	19.1	31.8	47.6	63.5	79.4	95.3
R(mm/s)	5.1	15.2	25.4	38.1	50.8	63.5	76.2
RPM r/min	60	180	300	450	600	750	900
PPS	200	600	1000	1500	2000	2500	3000

PHBL60 Series

Size 24 (60mm) Double Stack Speed Thrust Curves

Bipolar, Chopper Driver, 4.0 A Peak

(RECOMMENDED LOAD LIMIT 1050N)

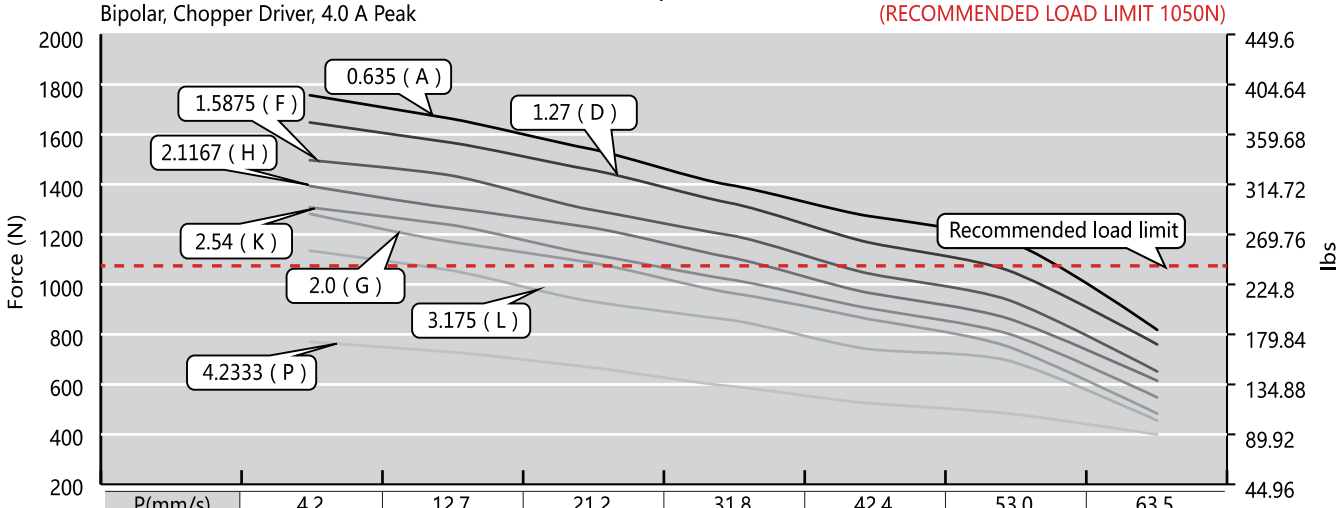

P(mm/s)	4.2	12.7	21.2	31.8	42.4	53.0	63.5
L(mm/s)	3.2	9.5	15.9	23.8	31.8	39.7	47.6
K(mm/s)	2.5	7.6	12.7	19.1	25.4	31.8	38.1
H(mm/s)	2.1	6.4	10.6	15.9	21.2	26.5	31.8
G(mm/s)	2.0	6.0	10.0	15.0	20.0	25.0	30.0
F(mm/s)	1.6	4.8	7.9	11.9	15.9	19.8	23.8
D(mm/s)	1.3	3.8	6.4	9.5	12.7	15.9	19.1
A(mm/s)	0.6	1.8	3.0	4.6	6.1	7.6	9.1
RPM r/min	60	180	300	450	600	750	900
PPS	200	600	1000	1500	2000	2500	3000

Size 24 (60mm) Double Stack Speed Thrust Curves

Bipolar, Chopper Driver, 4.0 A Peak

(RECOMMENDED LOAD LIMIT 1050N)

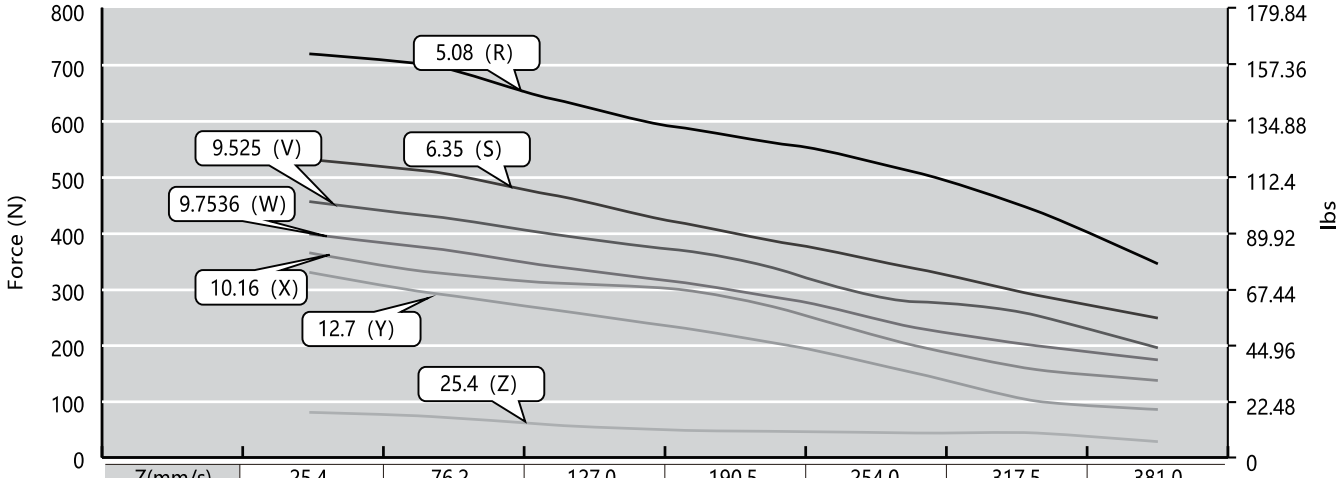

Z(mm/s)	25.4	76.2	127.0	190.5	254.0	317.5	381.0
Y(mm/s)	12.7	38.1	63.5	95.3	127.0	158.8	190.5
X(mm/s)	10.2	30.5	50.8	76.2	101.6	127.0	152.4
W(mm/s)	9.8	29.3	48.8	73.2	97.5	121.9	146.3
V(mm/s)	9.5	28.6	47.6	71.4	95.3	119.1	142.9
S(mm/s)	6.4	19.1	31.8	47.6	63.5	79.4	95.3
R(mm/s)	5.1	15.2	25.4	38.1	50.8	63.5	76.2
RPM r/min	60	180	300	450	600	750	900
PPS	200	600	1000	1500	2000	2500	3000

PHBL86 Series

Ambient Temperature	-20 °C ~ +50 °C
Temperature Rise	80 °C Max. (rated current, 2 phase on)
Dielectric Strength	500 VAC for one minute
Insulation Resistance	Class B (Class F also available)

Motor Specs

Model	Voltage	Current	Resistance	Inductance	Lead Wire	Motor Length	
	V/Ø	A/Ø	Ω/Ø	mH/Ø	Pin	inch	mm
PHBL86□80-4S13	12.0	1.3	9.2	71.0	4	3.1496	76
PHBL86□80-4S30	5.1	3.0	1.7	15.0	4	3.1496	76
PHBL86□80-4S55	2.85	5.5	0.52	4.5	4	3.1496	76

Note: Non-captive type (N) or External type (E) is available, and please specify it with the blank box when ordering.

Lead Screw Specs

Lead Code	Screw Dia.		Lead		Travel/Step @ 1.8Deg*		Travel/Step @ 0.9Deg*	
	inch	mm	inch	mm	inch	mm	inch	mm
K	0.625	15.875	0.1	2.54	0.0005	0.012	0.00025	0.006
L	0.625	15.875	0.125	3.175	0.00063	0.015	0.00031	0.0075
R	0.625	15.875	0.2	5.08	0.001	0.025	0.0005	0.0125
S	0.625	15.875	0.25	6.35	0.00125	0.031	0.00063	0.0155
Y	0.625	15.875	0.5	12.7	0.0025	0.0635	0.00125	0.0318
Z	0.625	15.875	1.0	25.4	0.005	0.127	0.0025	0.0635

Typical Dimension
Non-captive

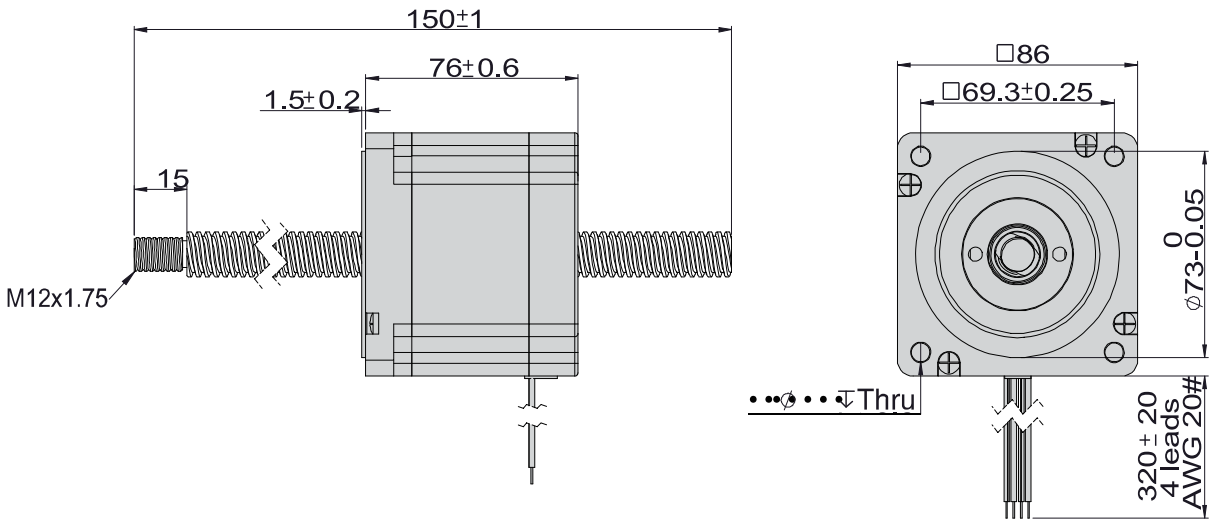

2Phase Hybrid Stepper Motor
3Phase Hybrid Stepper Motor
5Phase Hybrid Stepper Motor
Hybrid Stepper Gear Motor
Lead Screw Linear Actuator
Ball Screw Linear Actuator
IP65 Stepper Motor
Hollow Shaft Stepper Motor
Stepper Motor With Brake
Pancake Stepper Motor
PM Stepper Motor
Can-Stack Stepper Linear Actuator
PM Stepper Gear Motor
Stepper Motor Drive

PHBL86 Series

External

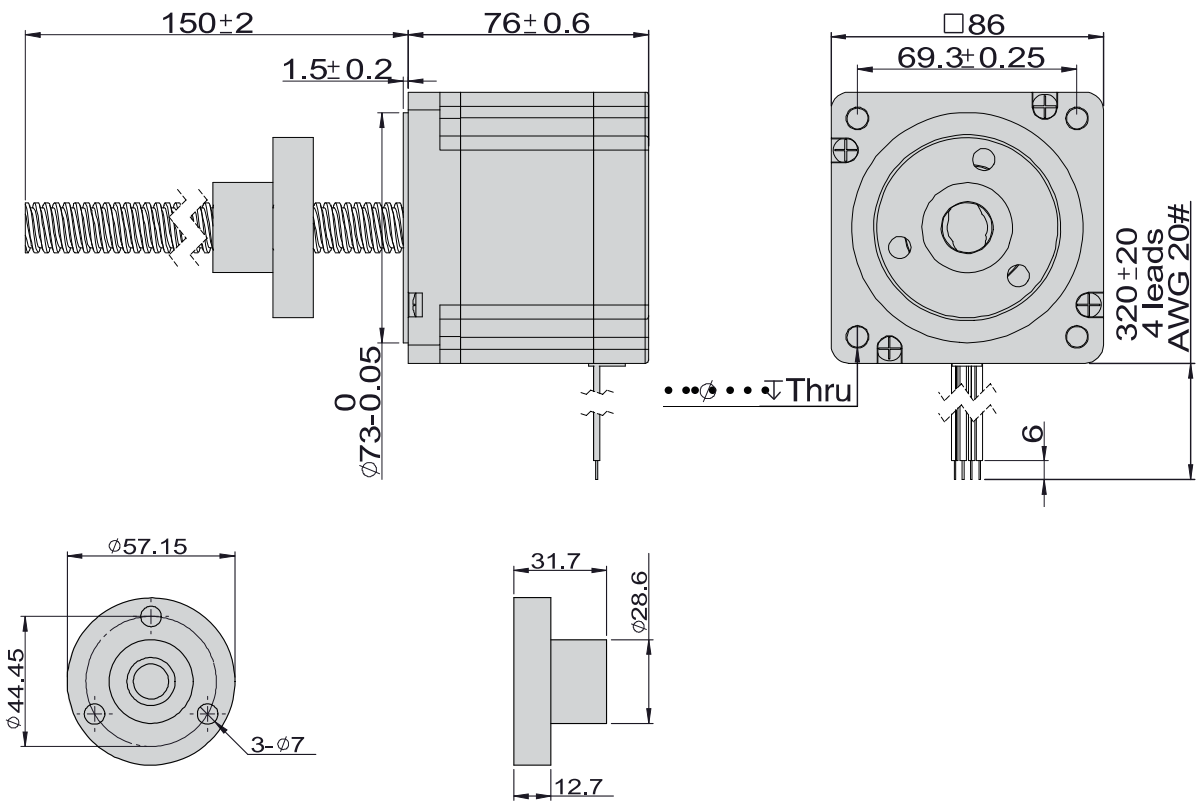

Linear Performance Curves

Size 34 (86mm) Single Stack Speed Thrust Curves

Screw Diameter 15.875 mm

Bipolar, Chopper Driver, 5.5 A RMS

(RECOMMENDED LOAD LIMIT 2270N)

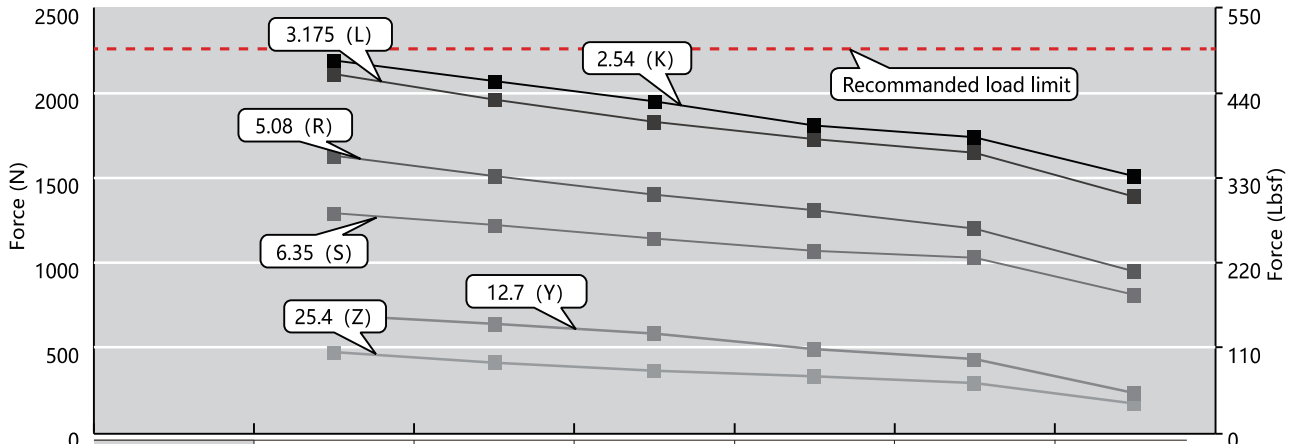

Z(mm/s)	25.4	76.2	101.6	127.0	152.4	190.5
Y(mm/s)	12.7	38.1	50.8	63.5	76.2	95.3
S(mm/s)	6.4	19.1	25.4	31.8	38.1	47.6
R(mm/s)	5.1	15.2	20.3	25.4	30.5	38.1
L(mm/s)	3.2	9.5	12.7	15.9	19.1	23.8
K(mm/s)	2.5	7.6	10.2	12.7	15.2	19.1
RPM r/min	60	180	240	300	360	450
PPS	200	600	800	1000	1200	1500

Encoder

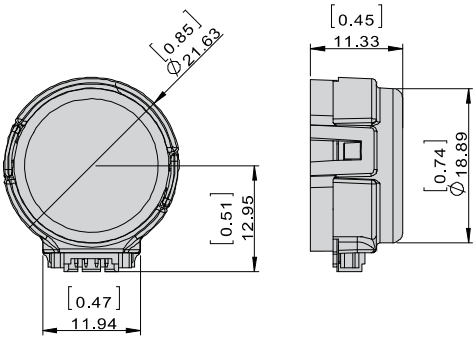

EK1 Encoder – single ended output

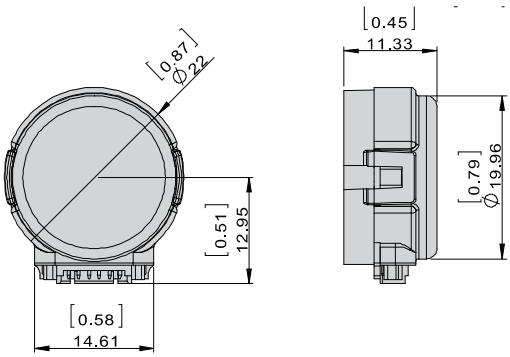

EK1 Encoder – differential output

EK1 Encoder (Used for Size 8, 11, 14, 17 Motor)

Resolution	100	108	120	125	128	200	250	256	300	360	400	500
Single ended Output	0	1	2	3	4	5	6	7	8	9	10	11
Differential output	A	B	C	D	E	F	G	H	I	J	K	L

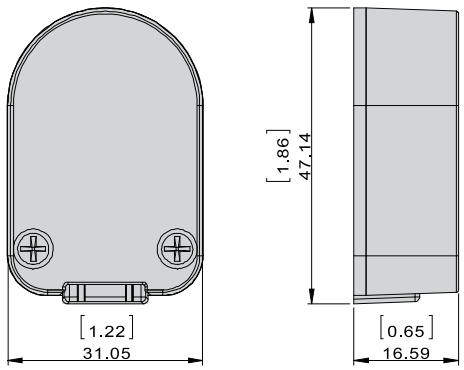

EK2 Encoder – single ended output

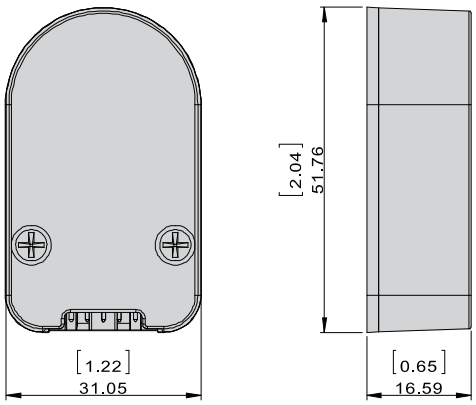

EK2 Encoder – differential output

EK2 Encoder (Used for Size 14, 17, 23 Motor)

Resolution	50	100	192	200	250	256	360	400	500	720	900	1000	1250	2000	2500	4000	5000
Single ended Output	0	1	2	3	4	5	6	7	8	9	10	11	12				
Differential output	A	B	C	D	E	F	G	H	I	J	K	L	M	N	O	P	Q

2Phase Hybrid Stepper Motor
3Phase Hybrid Stepper Motor
5Phase Hybrid Stepper Motor
Hybrid Stepper Gear Motor
Lead Screw Linear Actuator
Ball Screw Linear Actuator
IP65 Stepper Motor
Hollow Shaft Stepper Motor
Stepper Motor With Brake
Pancake Stepper Motor
PM Stepper Motor
Can-Stack Stepper Linear Actuator
PM Stepper Gear Motor
Stepper Motor Drive

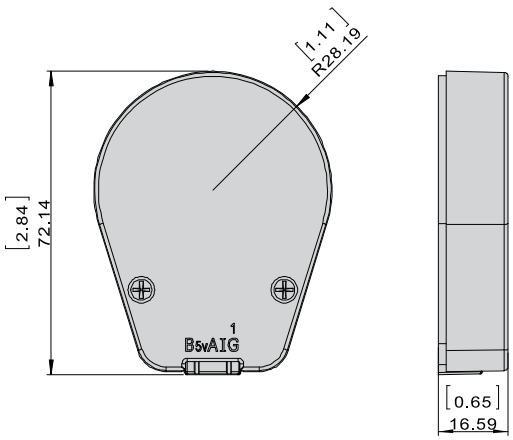

EK3 Encoder – single ended output

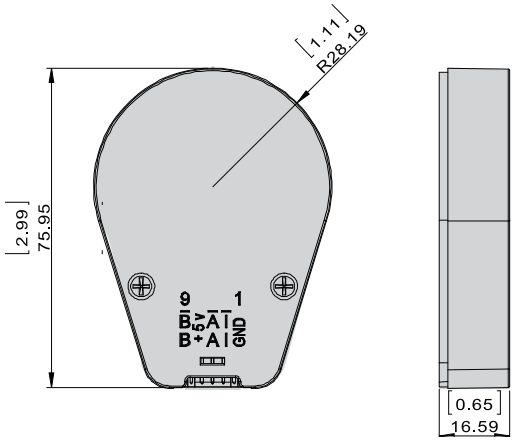

EK3 Encoder – differential output

EK3 Encoder (Used for Size 34 Motor)

Resolution	64	100	200	500	1000	1800	2000	2500	3600	4000	5000	7200	8000	10000
Single ended Output	0	1	2	3	4	5	6	7	8					
Differential output		A	B	C	D	E	F	G	H	I	J	K	L	M

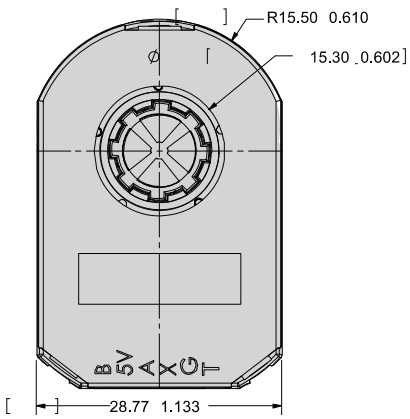

EK4 Encoder – single ended output (Size 14, 17)

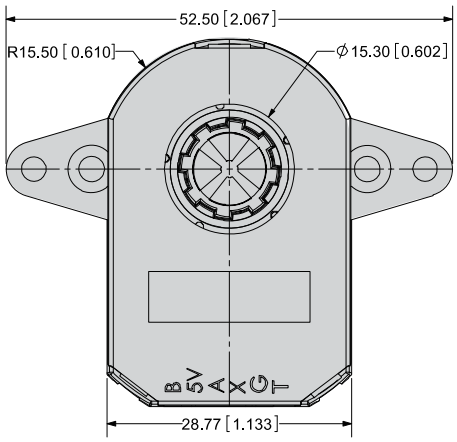

EK4 Encoder – single ended output (Size 23)

EK4 Encoder (Used for Size 14, 17, 23 Motor)

Resolution	48	96	100	125	192	200	250	256	384	400	500	512	800	1000	1024	2048
Single ended Output	0	1	2	3	4	5	6	7	8	9	10	11	12	13	14	15
Differential output	-	-	-	-	-	-	-	-	-	-	-	-	-	-	-	-

Screw End Machining

Standard metric or English options are available, as well as custom requirements.

Lead Screw End	NEMA 8	NEMA 11	NEMA 14
Threaded End 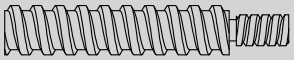	Metric: M2 X 0.4mm UNC: 2-56 UNC	Metric: M3 X 0.5mm UNC: 4-40 UNC	Metric: M4 X 0.7mm UNC: 8-32 UNC
Smooth End 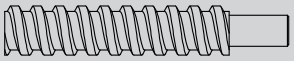	Ø2mm ± 0.025 Ø0.0787" ± 0.0010	Ø3mm ± 0.025 Ø0.1181" ± 0.0010	Ø4mm ± 0.025 Ø0.1575" ± 0.0010
None 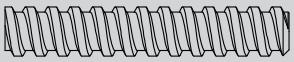	-	-	-
Custom End 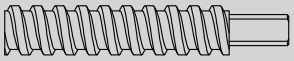	√	√	√

Lead Screw End	NEMA 17	NEMA 23	NEMA 34
Threaded End	Metric: M4 X 0.7mm UNC: 8-32 UNC	Metric: M6 X 1.0mm UNC: 1/4-20 UNC	Metric: M12 X 1.75mm UNC: 7/16-14 UNC
Smooth End 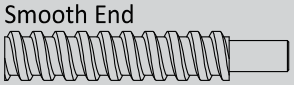	Ø4mm ± 0.025 Ø0.1575" ± 0.0010	Ø6mm ± 0.025 Ø0.2362" ± 0.0010	Ø12mm ± 0.025 Ø0.4724" ± 0.0010
None 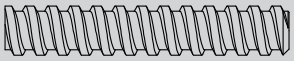	-	-	-
Custom End	√	√	√

NOTE: Customized screw end machining could be met, please contact PrimoPal's engineers for more details.

Lead Screw Noming Rule

PLS G R S — K 150 N

PLS — **PrimoPal Lead Screw**

G — **Lubrication**
G = standard grease
S = without grease
T = Teflon coated

R — **Direction of Thread**
R = Right hand thread
L = Left hand thread
B = Right and Left (Non-Captive only)
C = Custom

S — **Nut Style**
S = Lead screw only (Captive & Non-captive only)
N = Standard free-wheeling nut
A = Anti-backlash nut

K — **Lead Screw Code**
Refer to the table of lead screw code

150 — **Lead Screw Length**
150: 150mm

N — **End Machining Options**
A = Metric
B = UNC
S = Smooth
N = None
C = Custom

NOTE: Unless specified, all the screws are provided as follows:

1. Right hand threads
2. Standard lubrication on lead screw
3. No Teflon coating

Customized Nut

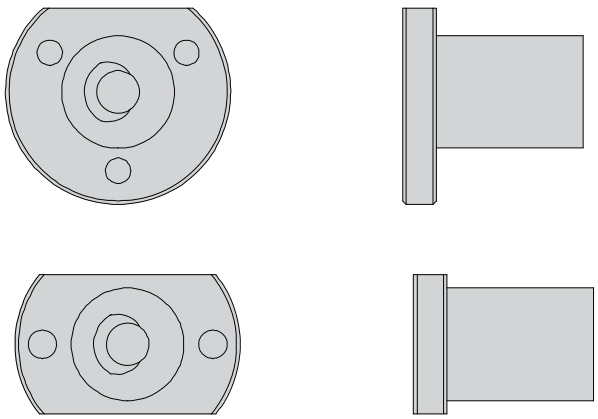

Manual Knob

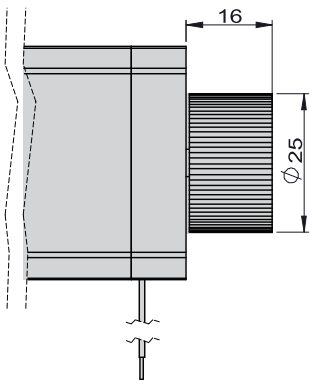

Installation Guide

Typical installation

Linear stepper motor + Linear guide

Non-captive motor + Linear guide

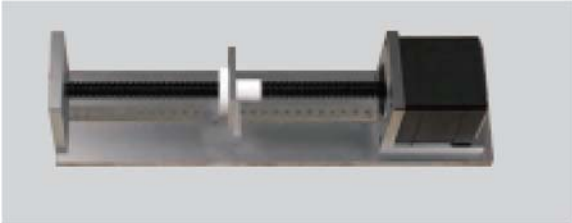

External motor+ Linear guide

Linear stepper motor + Guided rod

Non-captive motor + Guided rod

External motor + Guided rod

Captive motor mounted to load directly

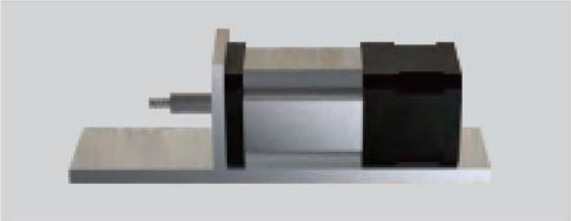

C

Hybrid Stepper Motor Linear Actuators

C 2 Hybrid Stepper Motor Ball Screw Linear Actuators

NEMA 8 · PHBS20 Series 1.8°	77-78
NEMA11 · PHBS28 Series 1.8°	79-81
NEMA14 · PHBS35 Series 1.8°	82-84
NEMA17 · PHBS42 Series 1.8°	85-87
NEMA23 · PHBS57 Series 1.8°	88-90
Accessories and options	91

PHBS 20 Series

Electrical Parameter

Model NO.	Rated Voltage	Current	Resistance	Inductance	Lead Wire	Motor Length
	V/Ø	A/Ø	Ω/Ø	mH/Ø	Pin	mm
PHBS20□30-4S04	3.5	0.4	8.8	2.8	4	20
PHBS20□30-4S05	2.55	0.5	5.1	1.5	4	27.2
PHBS20□40-4S05	4.4	0.5	8.8	2.7	4	38.1

Typical Dimension

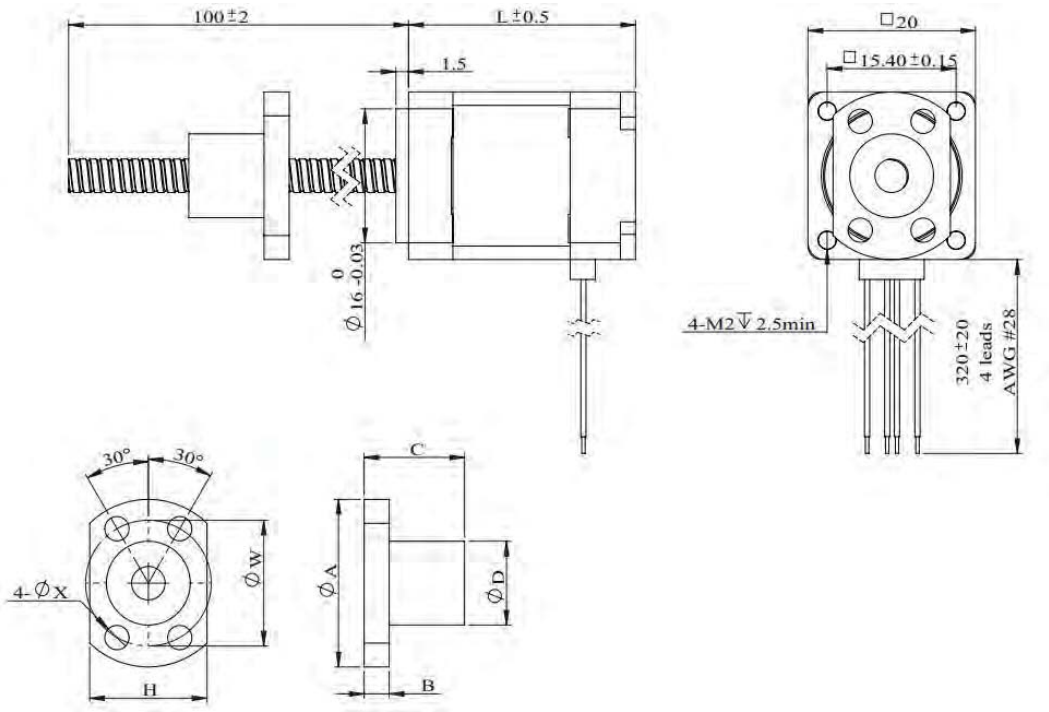

Ball Screw Specification

Ball screw type	BS0401	BS0402
Ball size	Φ0.8	Φ0.8
Number of thread	1	1
Thread direction	Right	
Shaft root dia.	Φ3.3	Φ3.3
Number of circuit	3.7×1	2.7×1
Shat, nut material	SCM415H	
Surface hardness	HRC58~62	
Anti-rust treatment	Anti-rust oil	

Nut siz e	A	B	C	D	H	W	X	Grade	Position accuracy	Total run out	Axial play	Dynamic load(N)	Static load(N)
BS0401	23	4	17	11	15	17	3.4	C7	±0.05	0.12	0.02	560	790
BS0402	23	4	19	11	15	17	3.4	C7	±0.05	0.12	0.02	420	570

PHBS 20 Series

Size 8 (20mm) Performance Curves

Size 8 (20mm) single stack speed thrust curves

Screw Diameter 4.0 mm

Bipolar, Chopper Driver, 0.5 A RMS

(Recommended load limit 45N)

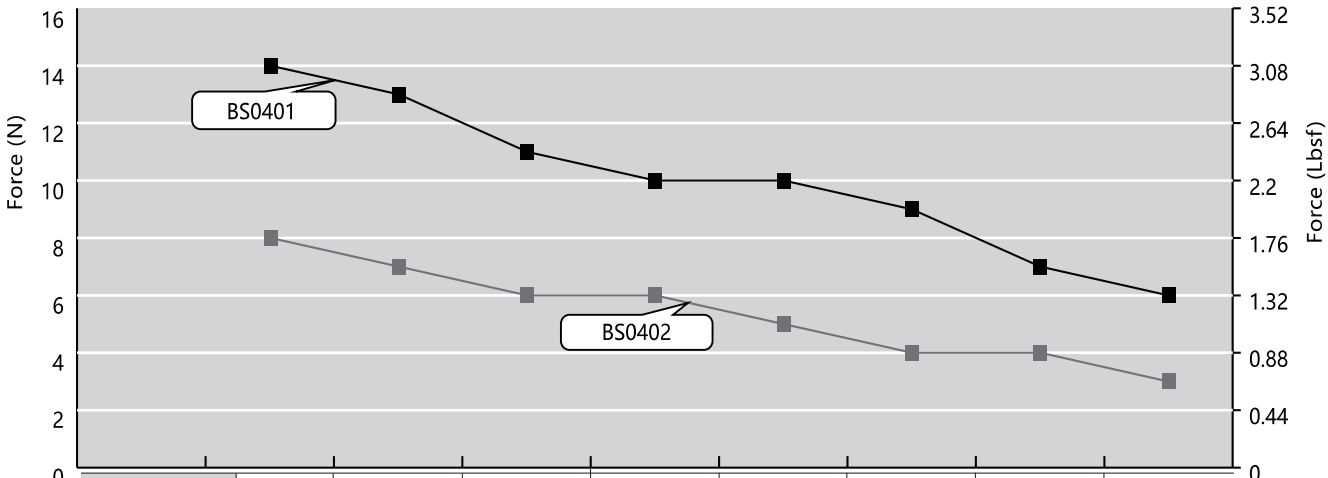

BS0402 (mm/s)	2	4	5	10	20	30	40	50
BS0401 (mm/s)	1	2	2.5	5	10	15	20	25
RPM r/min	60	120	150	300	600	900	1200	1500
PPS	200	400	500	1000	2000	3000	4000	5000

Size 8 (20mm) double stack speed thrust curves

Screw Diameter 4.0 mm

Bipolar, Chopper Driver, 0.5 A RMS

(RECOMMENDED LOAD LIMIT 45N)

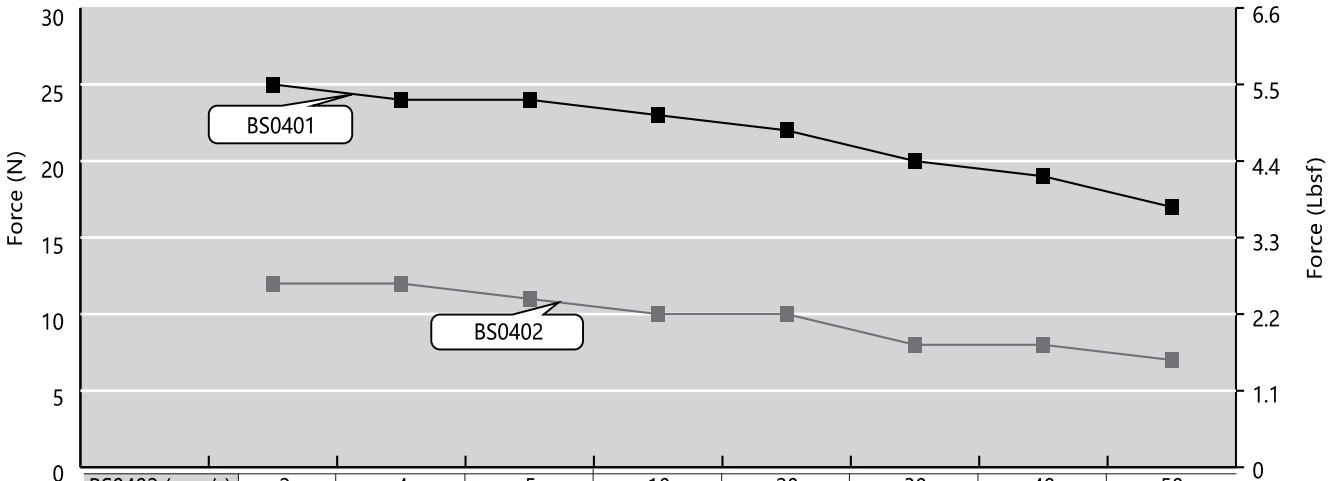

BS0402 (mm/s)	2	4	5	10	20	30	40	50
BS0401 (mm/s)	1	2	2.5	5	10	15	20	25
RPM r/min	60	120	150	300	600	900	1200	1500
PPS	200	400	500	1000	2000	3000	4000	5000

PHBS 28 Series

Electrical Parameter

Model NO.	Rated Voltage	Current	Resistance	Inductance	Lead Wire	Motor Length
	V/Ø	A/Ø	Ω/Ø	mH/Ø	Pin	mm
PHBS28□34-4S05	4.55	0.5	9.1	4.8	4	33.5
PHBS28□34-4S10	2.1	1.0	2.1	1.2	4	33.5
PHBS28□34-4S95	3.9	0.95	4.1	4.0	4	45
PHBS28□34-4S16	2.4	1.6	1.5	1.3	4	45

Typical Dimension

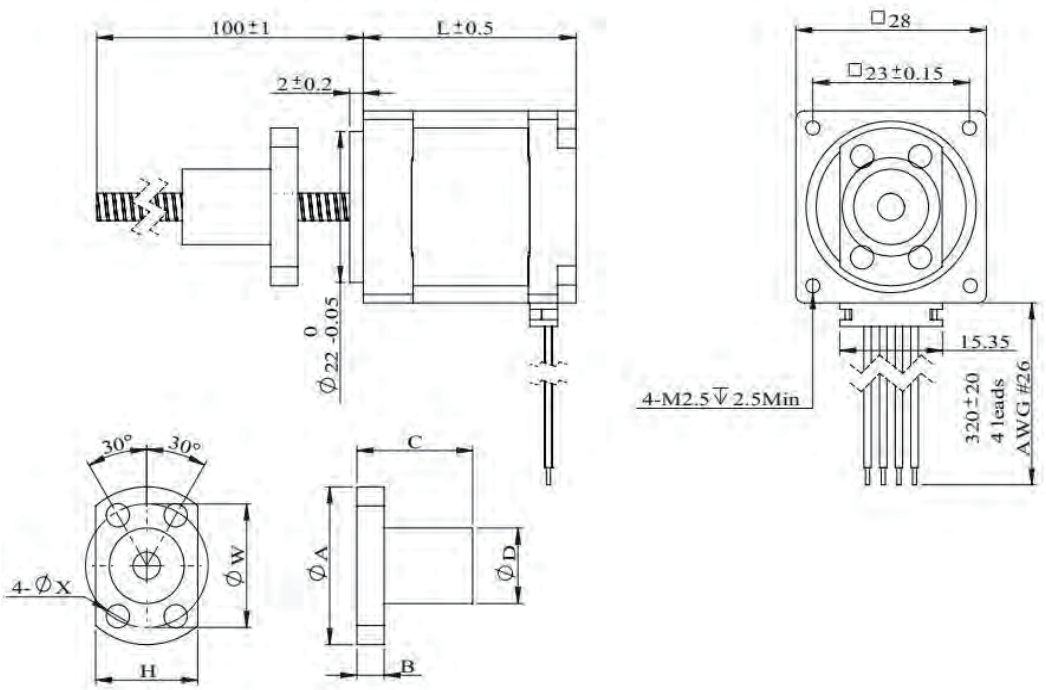

PRIMOPAL
2Phase Hybrid Stepper Motor
3Phase Hybrid Stepper Motor
5Phase Hybrid Stepper Motor
Hybrid Stepper Gear Motor
Lead Screw Linear Actuator
Ball Screw Linear Actuator
IP65 Stepper Motor
Hollow Shaft Stepper Motor
Stepper Motor With Brake
Pancake Stepper Motor
PM Stepper Motor
Can-Stack Stepper Linear Actuator
PM Stepper Gear Motor
Stepper Motor Drive

PHBS 28 Series

Ball Screw Specification

Ball screw type	BS0601	BS060	BS0606	BS0610	BS0504
Ball size	Φ0.8	Φ0.8	Φ0.8	Φ0.8	Φ0.8
Number of thread	1	1	1	1	1
Thread direction	Right				
Shaft root dia.	Φ5.3	Φ5.1	Φ5.2	Φ5.0	Φ5.0
Number of circuit	3.7×1	2.7×1	1.6×1	1.2×2	1.2×2
Shat, nut material	SCM415H				
Surface hardness	HRC58~62				
Anti-rust treatment	Anti-rust oil				

Nut size	A	B	C	D	H	W	X	Grade	Position accuracy	Total run out	Axial play	Dynamic load(N)	Static load(N)
BS0601	26	4	17	13	16	20	3.4	C7	static	0.12	0.02	680	1200
BS0602	28	4	17	15	19	22	3.4	C7	±0.05	0.12	0.02	750	1450
BS0606	27	4	17	14	16	21	3.4	C7	±0.05	0.12	0.02	870	1600
BS0610	27	4	17	14	16	21	3.4	C7	±0.05	0.12	0.02	950	1650
BS0504	24	4	22	12	16	18	3.4	C7	±0.05	0.12	0.02	470	720

PHBS 28 Series

Size 11 (28mm) Performance Curves

Size 11 (28mm) single stack speed thrust curves Screw Diameter 6.0mm / 5.0mm

Bipolar, Chopper Driver, 1.0 A RMS (Recommended load limit 115N)

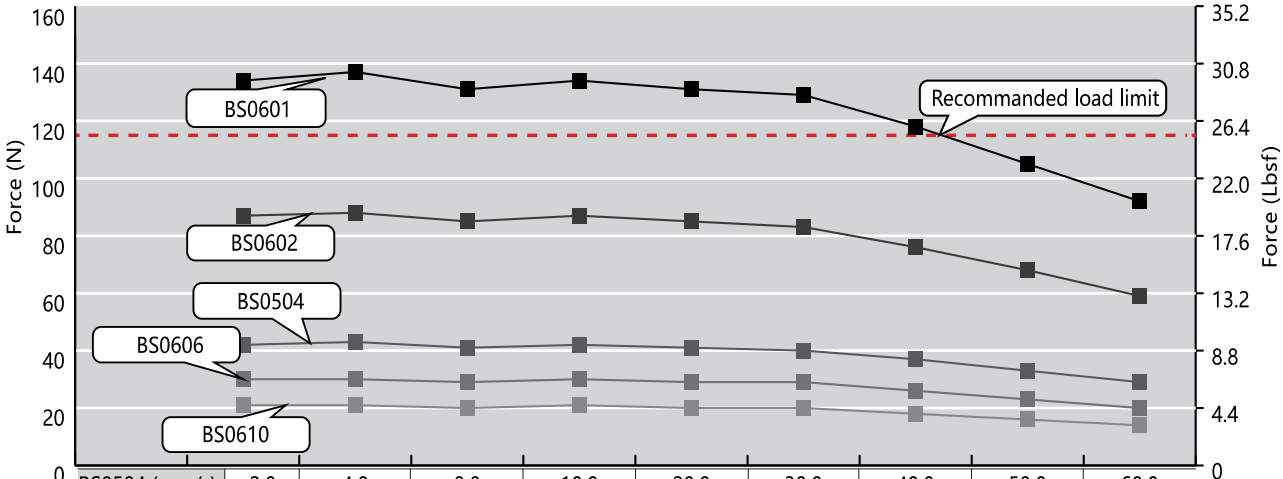

BS0504 (mm/s)	2.0	4.0	8.0	10.0	20.0	30.0	40.0	50.0	60.0
BS0610 (mm/s)	5.0	10.0	20.0	25.0	50.0	75.0	100.0	125.0	150.0
BS0606 (mm/s)	3.0	6.0	12.0	15.0	30.0	45.0	60.0	75.0	90.0
BS0602 (mm/s)	1.0	2.0	4.0	5.0	10.0	15.0	20.0	25.0	30.0
BS0601 (mm/s)	0.5	1.0	2.0	2.5	5.0	7.5	10.0	12.5	15.0
RPM r/min	30	60	120	150	300	450	600	750	900
PPS	100	200	400	500	1000	1500	2000	2500	3000

Size 11 (28mm) double stack speed thrust curves Screw Diameter 6.0mm / 5.0mm

Bipolar, Chopper Driver, 1.0 A RMS (Recommended load limit 140N)

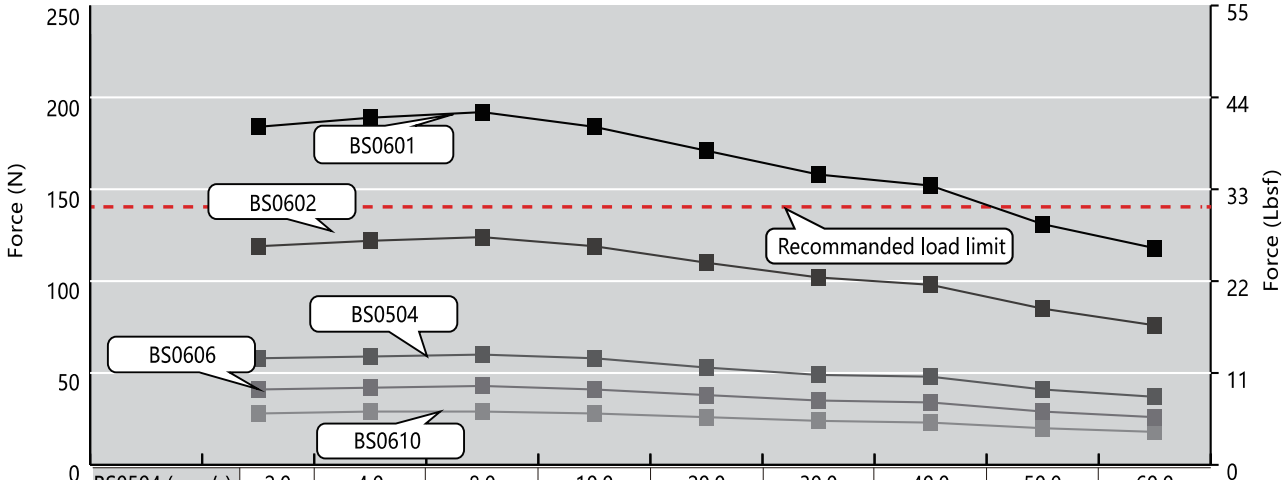

BS0504 (mm/s)	2.0	4.0	8.0	10.0	20.0	30.0	40.0	50.0	60.0
BS0610 (mm/s)	5.0	10.0	20.0	25.0	50.0	75.0	100.0	125.0	150.0
BS0606 (mm/s)	3.0	6.0	12.0	15.0	30.0	45.0	60.0	75.0	90.0
BS0602 (mm/s)	1.0	2.0	4.0	5.0	10.0	15.0	20.0	25.0	30.0
BS0601 (mm/s)	0.5	1.0	2.0	2.5	5.0	7.5	10.0	12.5	15.0
RPM r/min	30	60	120	150	300	450	600	750	900
PPS	100	200	400	500	1000	1500	2000	2500	3000

PHBS 35 Series

Electrical Parameter

Model NO.	Rated Voltage	Current	Resistance	Inductance	Lead Wire	Motor Length
	V/Ø	A/Ø	Ω/Ø	mH/Ø	Pin	mm
PHBS35□34-4S05	6.6	0.5	13.2	14.0	4	33.6
PHBS35□34-4S10	3.5	1.0	3.5	3.6	4	33.6
PHBS35□34-4S15	2.7	1.5	1.8	1.9	4	45.6
PHBS35□46-4S05	12.0	0.5	24.0	29.0	4	45.6
PHBS35□46-4S10	6.0	1.0	6.0	7.2	4	45.6
PHBS35□46-4S15	4.0	1.5	2.7	3.2	4	45.6

Typical Dimension

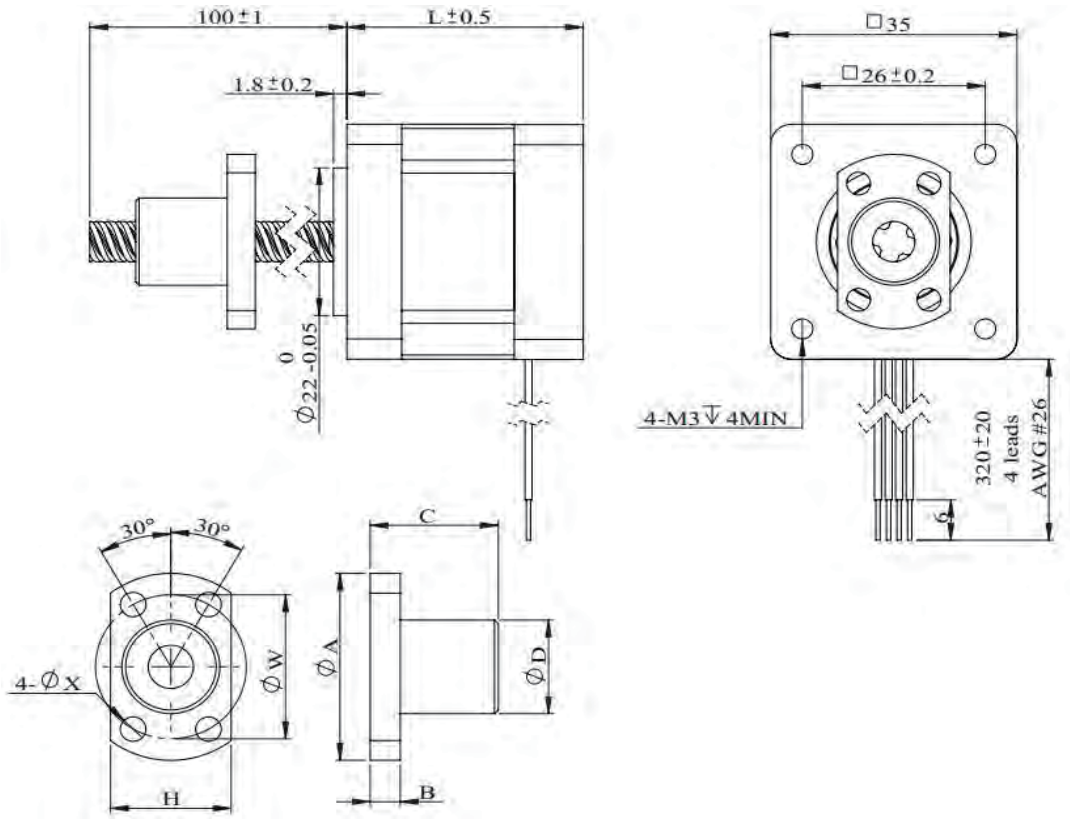

2Phase Hybrid Stepper Motor
3Phase Hybrid Stepper Motor
5Phase Hybrid Stepper Motor
Hybrid Stepper Gear Motor
Lead Screw Linear Actuator
Ball Screw Linear Actuator
IP65 Stepper Motor
Hollow Shaft Stepper Motor
Stepper Motor With Brake
Pancake Stepper Motor
PM Stepper Motor
Can-Stack Stepper Linear Actuator
PM Stepper Gear Motor
Stepper Motor Drive

PHBS 35 Series

Ball Screw Specification

Ball screw type	BS0601	BS0602	BS0606	BS0610
Ball size	Φ0.8	Φ0.8	Φ0.8	Φ0.8
Number of thread	1	1	1	1
Thread direction	Right			
Shaft root dia.	Φ5.3	Φ5.1	Φ5.2	Φ5.0
Number of circuit	3.7×1	2.7×1	1.6×1	1.2×2
Shat, nut material	SCM415H			
Surface hardness	HRC58~62			
Anti-rust treatment	Anti-rust oil			

Nut size	A	B	C	D	H	W	X	Grade	Position accuracy	Total run out	Axial play	Dynamic load(N)	Static load(N)
BS0601	26	4	17	13	16	20	3.4	C7	±0.05	0.12	0.02	680	1200
BS0602	28	4	17	15	19	22	3.4	C7	±0.05	0.12	0.02	750	1450
BS0606	27	4	17	14	16	21	3.4	C7	±0.05	0.12	0.02	870	1600
BS0610	27	4	17	14	16	21	3.4	C7	±0.05	0.12	0.02	950	1650

PHBS 35 Series

Size 14 (35mm) Performance Curves

Size 14 (35mm) single stack speed thrust curves

Screw Diameter 6.0mm

Bipolar, Chopper Driver, 1.0 A RMS

(Recommended load limit 230N)

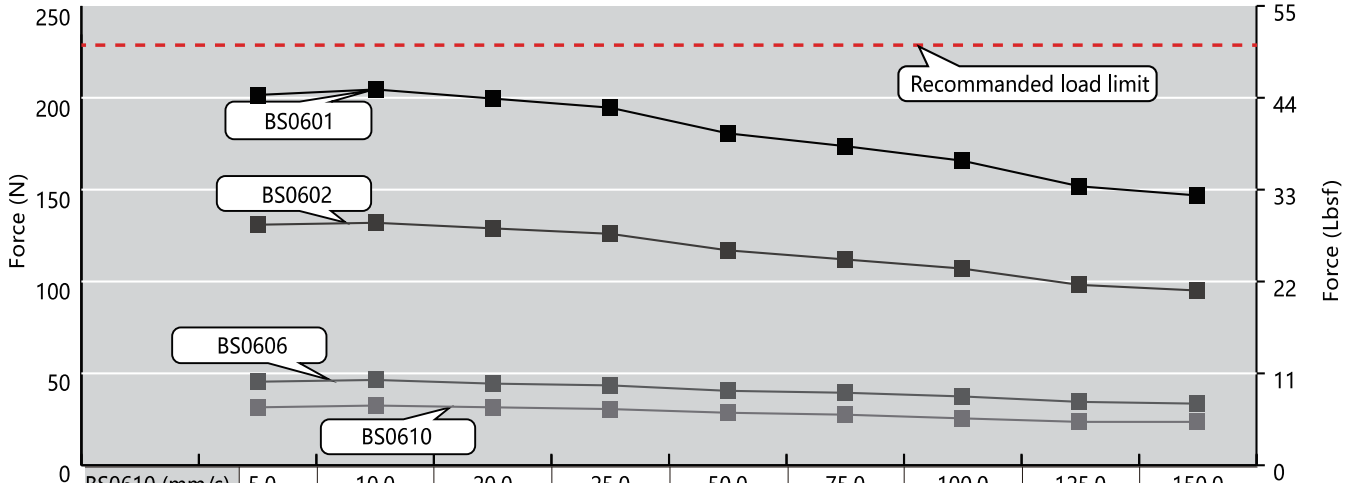

BS0610 (mm/s)	5.0	10.0	20.0	25.0	50.0	75.0	100.0	125.0	150.0
BS0606 (mm/s)	3.0	6.0	12.0	15.0	30.0	45.0	60.0	75.0	90.0
BS0602 (mm/s)	1.0	2.0	4.0	5.0	10.0	15.0	20.0	25.0	30.0
BS0601 (mm/s)	0.5	1.0	2.0	2.5	5.0	7.5	10.0	12.5	15.0
RPM r/min	30	60	120	150	300	450	600	750	900
PPS	100	200	400	500	1000	1500	2000	2500	3000

Size 14 (35mm) double stack speed thrust curves

Screw Diameter 6.0mm

Bipolar, Chopper Driver, 1.0 A RMS

(Recommended load limit 230N)

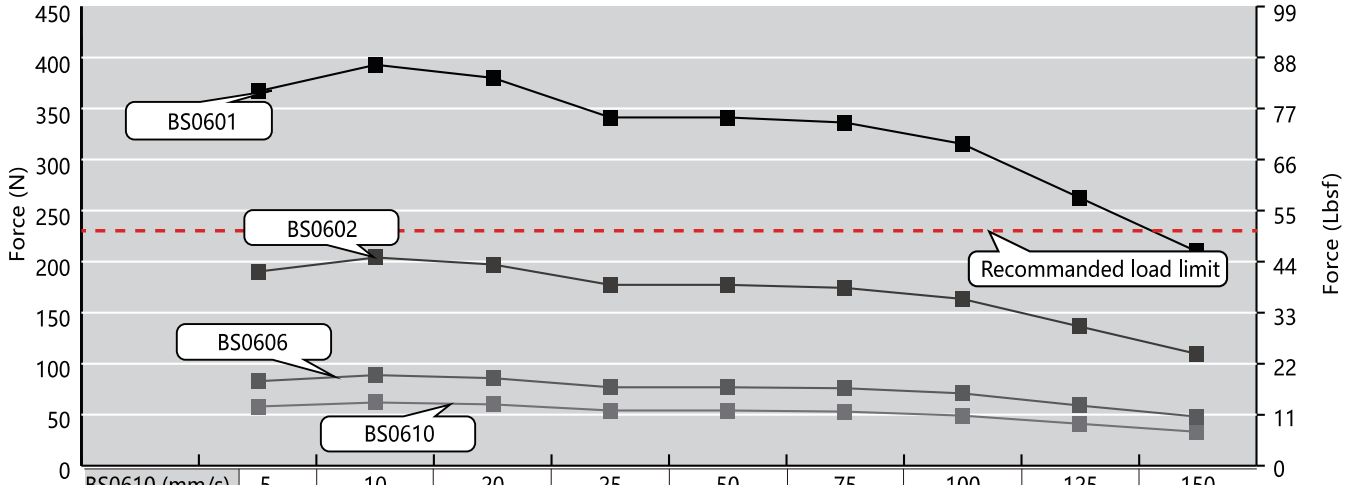

BS0610 (mm/s)	5	10	20	25	50	75	100	125	150
BS0606 (mm/s)	3	6	12	15	30	45	60	75	90
BS0602 (mm/s)	1	2	4	5	10	15	20	25	30
BS0601 (mm/s)	0.5	1	2	2.5	5	7.5	10	12.5	15
RPM r/min	30	60	120	150	300	450	600	750	900
PPS	100	200	400	500	1000	1500	2000	2500	3000

PHBS 42 Series

Electrical Parameter

Model NO.	Rated Voltage	Current	Resistance	Inductance	Lead Wire	Motor Length
	V/Ø	A/Ø	Ω/Ø	mH/Ø	Pin	mm
PHBS42□34-4S05	7.2	0.5	14.4	19.8	4	34.1
PHBS42□34-4S10	3.8	1.0	3.8	5.0	4	34.1
PHBS42□48-4S15	2.78	1.5	1.85	2.2	4	48.1
PHBS42□48-4S12	4.56	1.2	3.8	8.0	4	48.1
PHBS42□48-4S25	2.25	2.5	0.9	1.8	4	48.1

Typical Dimension

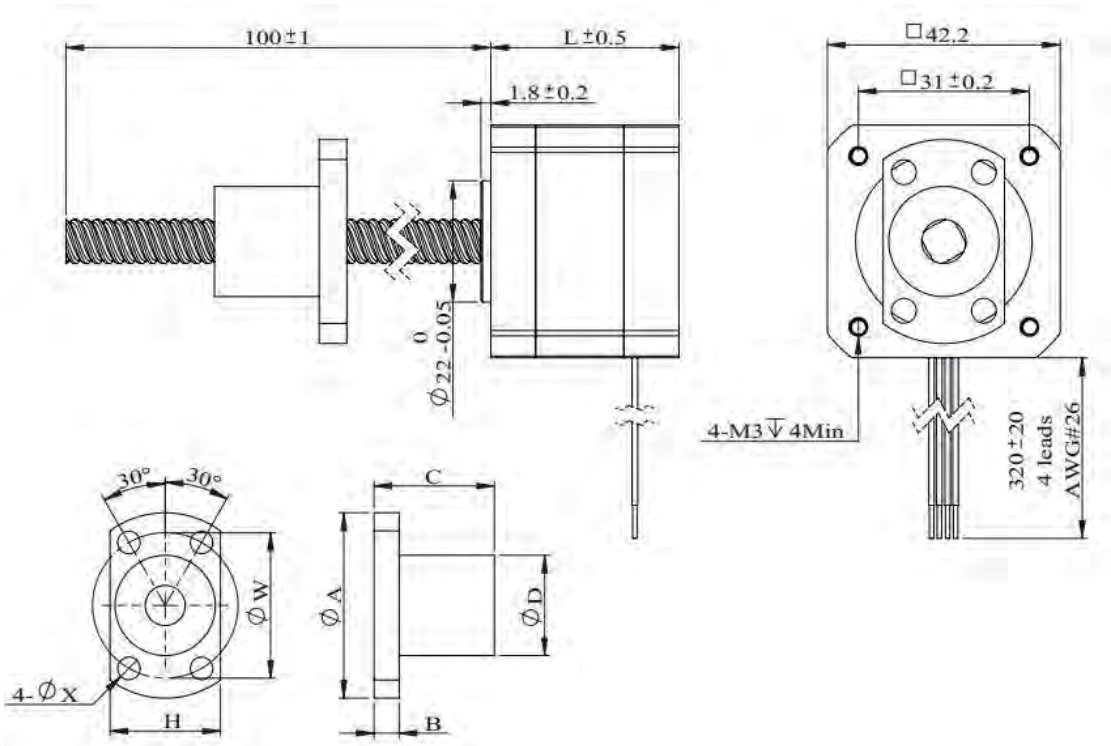

PHBS 42 Series

Ball Screw Specification

Ball screw type	BS0801	BS0802	BS0802.5	BS0805	BS0808	BS0810	BS0812
Ball size	Φ0.8	Φ1.5875	Φ1.5875	Φ1.5875	Φ1.5875	Φ1.5875	Φ1.5875
Number of thread	1	1	1	1	2	2	2
Thread direction	Right						
Shaft root dia.	Φ7.3	Φ6.6	Φ6.3	Φ6.6	Φ6.7	Φ6.7	Φ6.7
Number of circuit	3.7×1	3.7×1	2.7×1	2.1×1	1.6×2	1.6×2	1.6×2
Shat, nut material	SCM415H						
Surface hardness	HRC58~62						
Anti-rust treatment	Anti-rust oil						

Nut size	A	B	C	D	H	W	X	Grade	Position accuracy	Total run out	Axial play	Dynamic load(N)	Static load(N)
BS0801	29	4	17	16	18	23	3.4	C7	±0.05	0.12	0.02	780	1650
BS0802	37	4	24	20	22	29	4.5	C7	±0.05	0.12	0.02	2400	4100
BS0802.5	29	4	16	16	18	23	3.4	C7	±0.05	0.12	0.02	1850	3000
BS0805	31	4	28	18	20	25	3.4	C7	±0.05	0.12	0.02	1850	3000
BS0808	31	4	20	18	20	25	3.4	C7	±0.05	0.12	0.02	2300	3800
BS0810	31	4	20	18	20	25	3.4	C7	±0.05	0.12	0.02	2200	3800
BS0812	31	4	24	18	20	25	3.4	C7	±0.05	0.12	0.02	2200	3800

PHBS 42 Series

Size 17 (42mm) Performance Curves

Size 17 (42mm) single stack speed thrust curves

Screw Diameter 8.0mm

Bipolar, Chopper Driver, 1.0 A RMS

(Recommended load limit 230N)

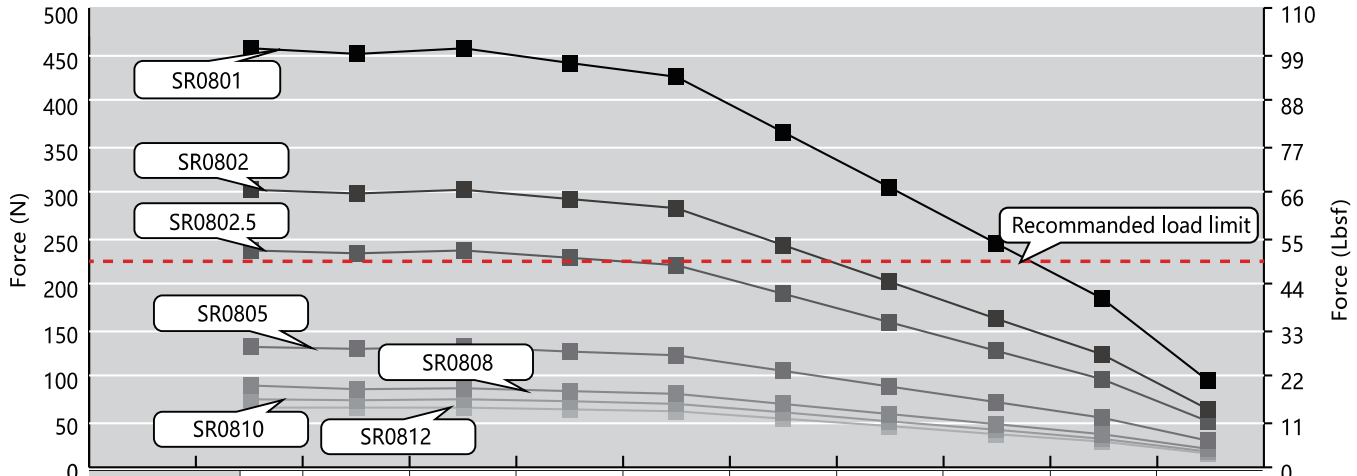

SR0812 (mm/s)	6	12	24	30	60	90	120	150	180	210
SR0810 (mm/s)	5	10	20	25	50	75	100	125	150	175
SR0808 (mm/s)	4	8	16	20	40	60	80	100	120	140
SR0805 (mm/s)	2.5	5	10	12.5	25	37.5	50	62.5	75	87.5
SR0802.5 (mm/s)	1.25	2.5	5	6.25	12.5	18.75	25	31.25	37.5	43.75
SR0802 (mm/s)	1	2	4	5	10	15	20	25	30	35
SR0801 (mm/s)	0.5	1	2	2.5	5	7.5	10	12.5	15	17.5
RPM r/min	30	60	120	150	300	450	600	750	900	1050
PPS	100	200	400	500	1000	1500	2000	2500	3000	3500

Size 17 (42mm) double stack speed thrust curves

Screw Diameter 8.0mm

Bipolar, Chopper Driver, 1.5 A RMS

(Recommended load limit 230N)

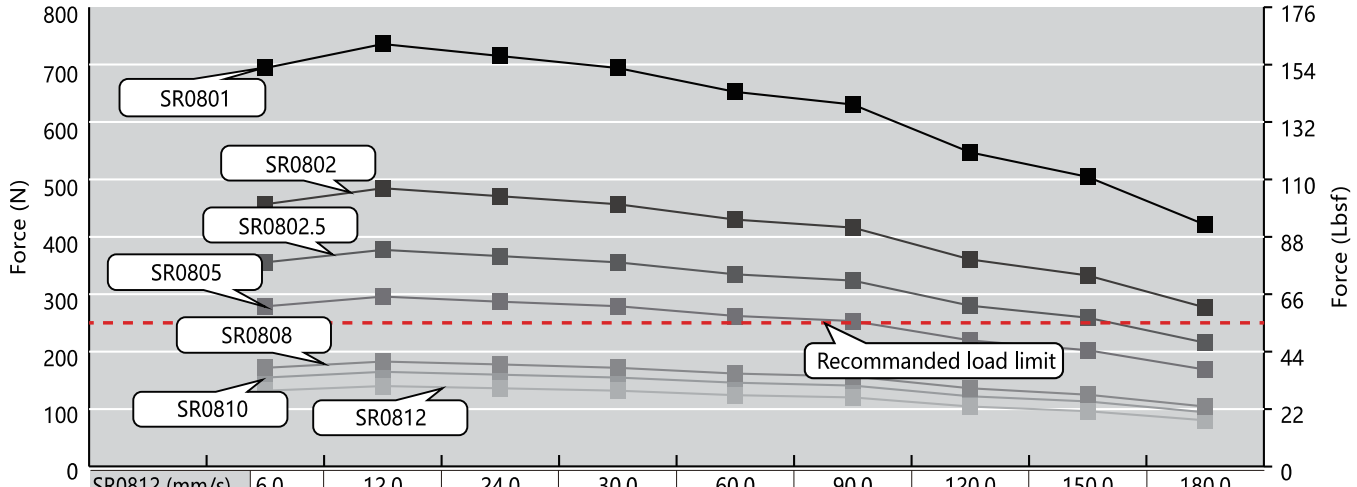

SR0812 (mm/s)	6.0	12.0	24.0	30.0	60.0	90.0	120.0	150.0	180.0
SR0810 (mm/s)	5.0	10.0	20.0	25.0	50.0	75.0	100.0	125.0	150.0
SR0808 (mm/s)	4.0	8.0	16.0	20.0	40.0	60.0	80.0	100.0	120.0
SR0805 (mm/s)	2.5	5.0	10.0	12.5	25.0	37.5	50.0	62.5	75.0
SR0802.5 (mm/s)	1.3	2.5	5.0	6.3	12.5	18.8	25.0	31.3	37.5
SR0802 (mm/s)	1.0	2.0	4.0	5.0	10.0	15.0	20.0	25.0	30.0
SR0801 (mm/s)	0.5	1.0	2.0	2.5	5.0	7.5	10.0	12.5	15.0
RPM r/min	30	60	120	150	300	450	600	750	900
PPS	100	200	400	500	1000	1500	2000	2500	3000

PHBS 57 Series

Electrical Parameter

Model NO.	Rated Voltage	Current	Resistance	Inductance	Lead Wire	Motor Length
	V/Ø	A/Ø	Ω/Ø	mH/Ø	Pin	mm
PHBS57□45-4S10	6.4	1.0	6.4	16.4	4	45
PHBS57□45-4S20	3.5	2.0	1.75	4.1	4	45
PHBS57□45-4S30	2.4	3.0	0.8	1.7	4	45
PHBS57□65-4S10	11.5	1.0	11.5	32.0	4	65
PHBS57□65-4S25	5.0	2.5	2.0	5.2	4	65
PHBS57□65-4S40	2.8	4.0	0.7	2.0	4	65

Typical Dimension

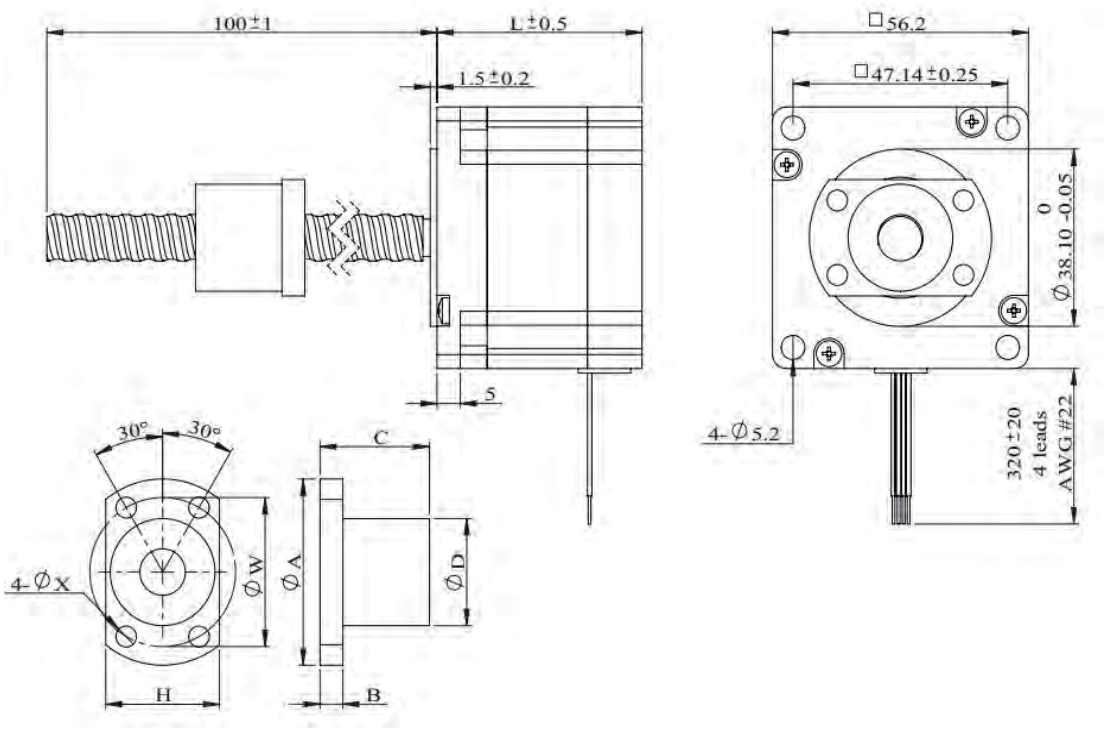

2Phase Hybrid Stepper Motor
3Phase Hybrid Stepper Motor
5Phase Hybrid Stepper Motor
Hybrid Stepper Gear Motor
Lead Screw Linear Actuator
Ball Screw Linear Actuator
IP65 Stepper Motor
Hollow Shaft Stepper Motor
Stepper Motor With Brake
Pancake Stepper Motor
PM Stepper Motor
Can-Stack Stepper Linear Actuator
PM Stepper Gear Motor
Stepper Motor Drive

PHBS 57 Series

Ball Screw Specification

Ball screw type	BS1002	BS1004	BS1005	BS1010	BS1015	BS1020	BS1202	BS1210
Ball size	Φ1.5875	Φ2.0	Φ2.0	Φ2.0	Φ2.0	Φ1.5875	Φ1.5875	Φ2.381
Number of thread	1	1	1	2	2	4		
Thread direction	Right							
Shaft root dia.	Φ8.6	Φ8.2	Φ8.2	Φ8.4	Φ8.4	Φ8.7	Φ10.6	Φ10.2
Number of circuit	3.7×1	2.7×1	2.7×1	1.6×1	1.6×2	0.7×2	3.7×1	1.7 x 2
Shat, nut material	SCM415H							
Surface hardness	HRC58~62							
Anti-rust treatment	Anti-rust oil							

Nut size	A	B	C	D	H	W	X	Grade	Position accuracy	Total run out	Axial play	Dynamic load(N)	Static load(N)
BS01002	40	5	24	23	25	32	4.5	C7	static	0.12	0.02	2700	5300
BS1004	41	5	28	24	26	33	4.5	C7	±0.05	0.12	0.02	3000	5200
BS1005	40	5	26	23	25	32	4.5	C7	±0.05	0.12	0.02	3000	5200
BS1010	40	5	24	23	25	32	4.5	C7	±0.05	0.12	0.02	3300	5900
BS1015	40	5	33	23	25	32	4.5	C7	±0.05	0.12	0.02	3300	6400
BS1020	37	5	23	20	20	29	4.5	C7	±0.05	0.12	0.02	2100	4000
BS1202	42	5	24	25	25	34	4.5	C7	±0.05	0.12	0.02	3000	6400
BS1210	41	5	30	24	24	33	4.5	C7	±0.05	0.12	0.02	5100	9800

PRIMOPAL
2Phase Hybrid Stepper Motor
3Phase Hybrid Stepper Motor
5Phase Hybrid Stepper Motor
Hybrid Stepper Gear Motor
Lead Screw Linear Actuator
Ball Screw Linear Actuator
IP65 Stepper Motor
Hollow Shaft Stepper Motor
Stepper Motor With Brake
Pancake Stepper Motor
PM Stepper Motor
Can-Stack Stepper Linear Actuator
PM Stepper Gear Motor
Stepper Motor Drive

PHB 57 Series

Size 23 (57mm) Performance Curves

Size 23 (57mm) single stack speed thrust curves Screw Diameter 10.0mm / 12.0mm

Bipolar, Chopper Driver, 2.0 A RMS

(Recommended load limit 910N)

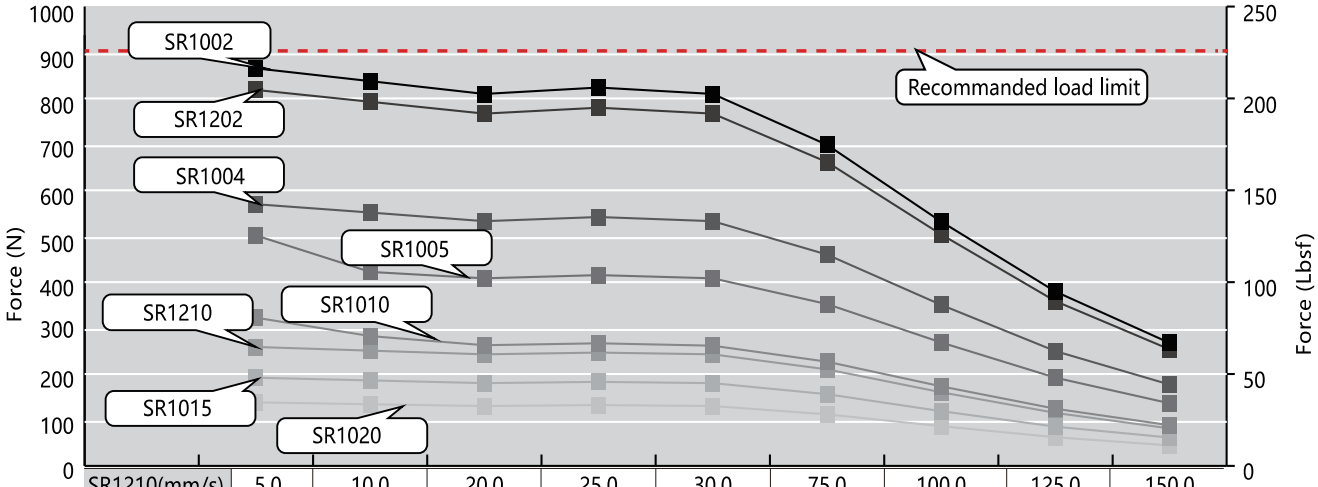

SR1210(mm/s)	5.0	10.0	20.0	25.0	30.0	75.0	100.0	125.0	150.0
SR1202(mm/s)	1.0	2.0	4.0	5.0	10.0	15.0	20.0	25.0	30.0
SR1020(mm/s)	10.0	20.0	40.0	50.0	100.0	150.0	200.0	250.0	300.0
SR1015(mm/s)	7.5	15.0	30.0	37.5	75.0	112.5	150.0	187.5	225.0
SR1010(mm/s)	5.0	10.0	20.0	25.0	50.0	75.0	100.0	125.0	150.0
SR1005(mm/s)	2.5	5.0	10.0	12.5	25.0	37.5	50.0	62.5	75.0
SR1004(mm/s)	2.0	4.0	8.0	10.0	20.0	30.0	40.0	50.0	60.0
SR1002(mm/s)	1.0	2.0	4.0	5.0	10.0	15.0	20.0	25.0	30.0
RPM r/min	30	60	120	150	300	450	600	750	900
PPS	100	200	400	500	1000	1500	2000	2500	3000

Size 23 (57mm) double stack speed thrust curves Screw Diameter 10.0mm / 12.0mm

Bipolar, Chopper Driver, 4.0 A RMS

(Recommended load limit 910N)

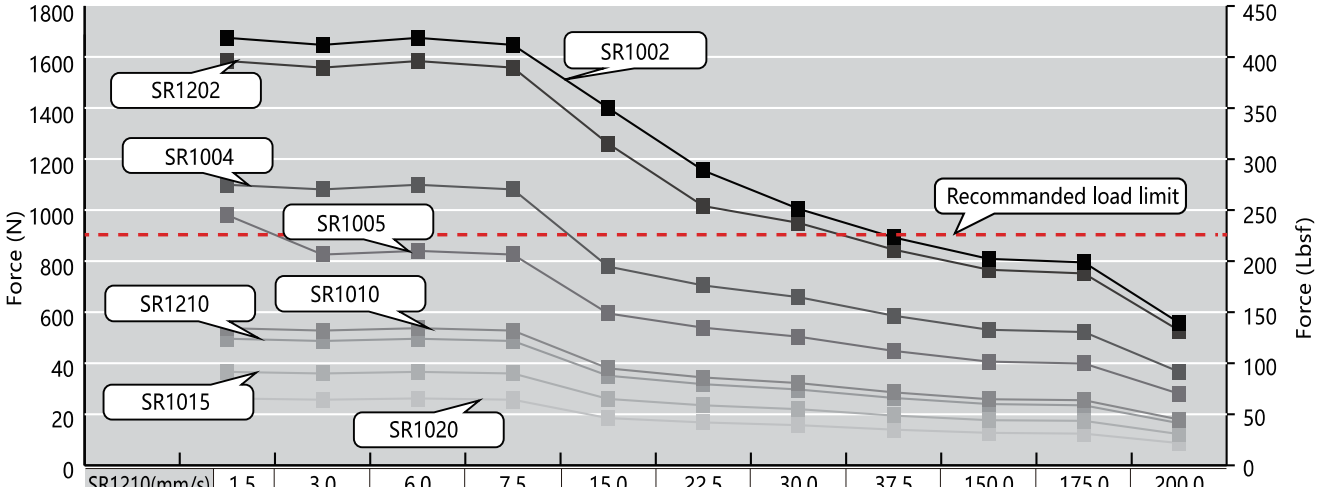

SR1210(mm/s)	1.5	3.0	6.0	7.5	15.0	22.5	30.0	37.5	150.0	175.0	200.0
SR1202(mm/s)	1.0	2.0	4.0	5.0	10.0	15.0	20.0	25.0	30.0	35.0	40.0
SR1020(mm/s)	10.0	20.0	40.0	50.0	100.0	150.0	200.0	250.0	300.0	350.0	400.0
SR1015(mm/s)	7.5	15.0	30.0	37.5	75.0	112.5	150.0	187.5	225.0	262.5	300.0
SR1010(mm/s)	5.0	10.0	20.0	25.0	50.0	75.0	100.0	125.0	150.0	175.0	200.0
SR1005(mm/s)	2.5	5.0	10.0	12.5	25.0	37.5	50.0	62.5	75.0	87.5	100.0
SR1004(mm/s)	2.0	4.0	8.0	10.0	20.0	30.0	40.0	50.0	60.0	70.0	80.0
SR1002(mm/s)	1.0	2.0	4.0	5.0	10.0	15.0	20.0	25.0	30.0	35.0	40.0
RPM r/min	30	60	120	150	300	450	600	750	900	1050	1200
PPS	100	200	400	500	1000	1500	2000	2500	3000	3500	4000

Ball Screw End Machining

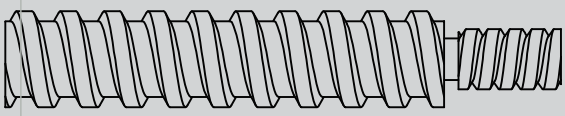	Thread End	Customized screw end machining are welcome, please contact Primopal engineer for more details.
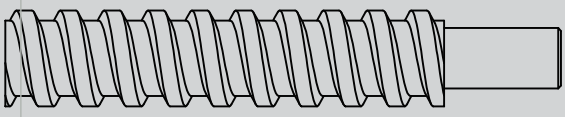	Smooth End	
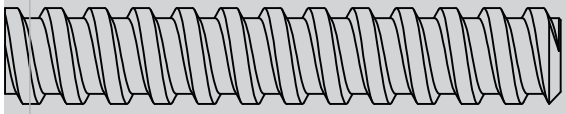	None	
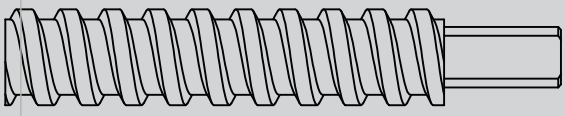	Customized	

D

IP65 Rated Stepper Motor

PHP Series

Description	93
Applications	93
Part Number	93
NEMA14 · PHP35S	94
NEMA17 · PHP42S	95
NEMA23 · PHP57S	96
NEMA24 · PHP60S	97
NEMA34 · PHP86S	98

Description

PrimoPal's NEMA 14, 17, 23, 24 and 34 stepper motors with high IP ratings are specially designed for severe environmental conditions, and even shaft sealing can be IP65 for underwater or harsh industrial operation. These new models, dust proof and resistant to low pressure water jets, are ideal for applications in wet factory environments such as the food and beverage industry, fountain equipment or outdoor use, featuring with special sealing at rear end and between stator and flanges, a front shaft contact seal, sealed-lamination housing, leak-proof cable entry, and so on.

Applications

PrimoPal's PHP series high IP stepper motor are mainly used in harsh wet environment, and they are ideal solution for food processing, pharmaceutical, chemical and other industries.

Part Number

PHP	□□	□	□□	–	□	□□	–	IP65
PrimoPal High IP Stepper Motor	**Motor Frame Size** (O.D. in mm)	**Step Angle** S: 1.8° T: 1.2°	**Motor Length** (mm)		**Lead Wires** 3/4/6/8	**Motor Electric & Mechanical Variation** Variety of current, rear shaft(if any),etc		**Protection Class**

PHP35S Series

Key Features

- Small Size
- Smooth Movement
- Low Inertia

Step Angle	1.8°
Step Angle Accuracy	±5% (full step, no load)
Resistance Accuracy	±10%
Inductance Accuracy	±20%
Temperature Rise	80 °C Max.(rated current, 2 phase on)
Ambient Temperature	-20 °C ~ +50 °C
Insulation Resistance	100 MΩ Min., 500VDC
Dielectric Strength	500 VAC for one minute
Shaft Radial Play	0.02 Max. (450 g-load)
Shaft Axial Play	0.08 Max. (450 g-load)

Specifications

Series & Length	Model Number	Holding Torque		Rated Current	Resistance per phase	Inductance per phase	Detent Torque		Rotor Inertia	
		N.cm	oz-in	A	ohm	mH	N.cm	oz-in	$g.cm^2$	$oz\text{-}in^2$
PHP35S34 34mm	PHP35S34-402	18	25.2	0.8	6.5	9.8	1.0	1.4	13	0.072
PHP35S42 42mm	PHP35S42-402	22	30.8	0.8	10.5	13	1.5	2.1	22	0.121
PHP35S52 52mm	PHP35S52-404	30	42	1.8	2.5	5.0	2.0	2.8	26	0.143

Mechanical Dimension

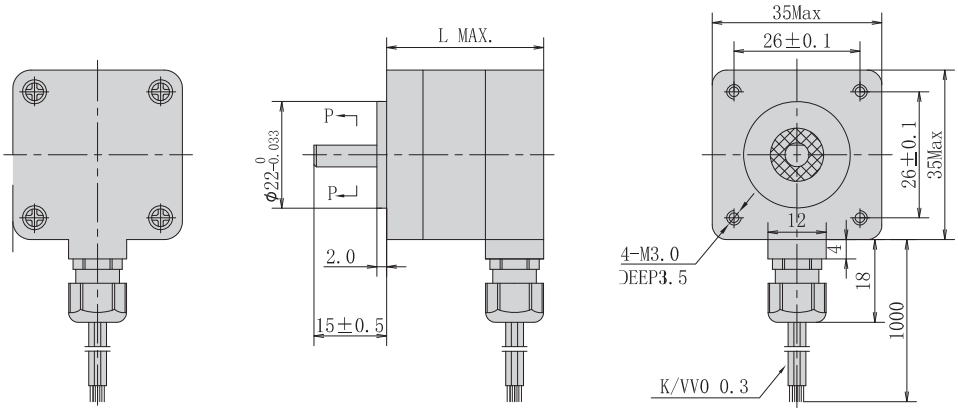

Series	L	Mass
	mm (in.)	kg (lb.)
PHP35S34	34 (1.34)	0.16 (0.35)
PHP35S42	42 (1.65)	0.20 (0.44)
PHP35S52	52 (2.05)	0.23 (0.51)

PHP42S Series

Key Features

- Small Size
- Smooth Movement
- Low Inertia

Step Angle	1.8°
Step Angle Accuracy	±5% (full step, no load)
Resistance Accuracy	±10%
Inductance Accuracy	±20%
Temperature Rise	80 °C Max.(rated current, 2 phase on)
Ambient Temperature	-20 °C ~ +50 °C
Insulation Resistance	100 MΩ Min., 500VDC
Dielectric Strength	500 VAC for one minute
Shaft Radial Play	0.02 Max. (450 g-load)
Shaft Axial Play	0.08 Max. (450 g-load)

Specifications

- Bi-polar

Series & Length	Model Number	Holding Torque		Rated Current	Resistance per phase	Inductance per phase	Detent Torque		Rotor Inertia	
		N.cm	oz-in	A	ohm	mH	N.cm	oz-in	g.cm²	oz-in²
PHP42S40 40mm	PHB42S40-402	40	56	1.7	1.5	2.8	2.2	3.08	54	0.297
PHP42S48 48mm	PHB42S48-403	52	72.8	2.3	1.2	1.6	2.6	3.64	68	0.374

Mechanical Dimension

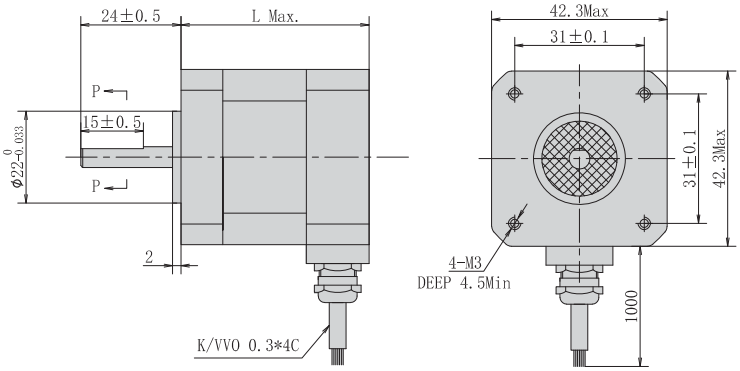

Series	L	Mass
	mm (in.)	kg (lb.)
PHP42S40	40 (1.57)	0.28(0.62)
PHP42S48	48 (1.89)	0.35(0.77)

PHP57S Series

Key Features

- High Torque
- Smooth Movement
- Low Inertia

Step Angle	1.8°
Step Angle Accuracy	±5% (full step, no load)
Resistance Accuracy	±10%
Inductance Accuracy	±20%
Temperature Rise	80 °C Max.(rated current, 2 phase on)
Ambient Temperature	-20 °C ~ +50 °C
Insulation Resistance	100 MΩ Min., 500VDC
Dielectric Strength	500 VAC for one minute
Shaft Radial Play	0.02 Max. (450 g-load)
Shaft Axial Play	0.08 Max. (450 g-load)

Specifications

Series & Length	Model Number	Holding Torque		Rated Current	Resistance per phase	Inductance per phase	Bi/Unipolar	Rotor Inertia	
		N.m	oz-in	A	ohm	mH	# of Leads	g.cm²	oz-in²
PHP57S66 66mm	PHP57S66-410-IP65	1.2	1.68	1.0	6.0	22.0	Bi (4)	280	1.540
	PHP57S66-420-IP65	1.2	1.68	2.0	1.65	5.7	Bi (4)	280	1.540
	PHP57S66-430-IP65	1.2	1.68	3.0	0.74	2.4	Bi (4)	280	1.540
PHP57S86 86mm	PHP57S86-420-IP65	2.0	2.80	2.0	2.5	9.7	Bi (4)	480	2.640
	PHP57S86-430-IP65	2.0	2.80	3.0	1.15	4.4	Bi (4)	480	2.640
	PHP57S86-440-IP65	2.0	2.80	4.0	0.65	2.5	Bi (4)	480	2.640

Mechanical Dimension

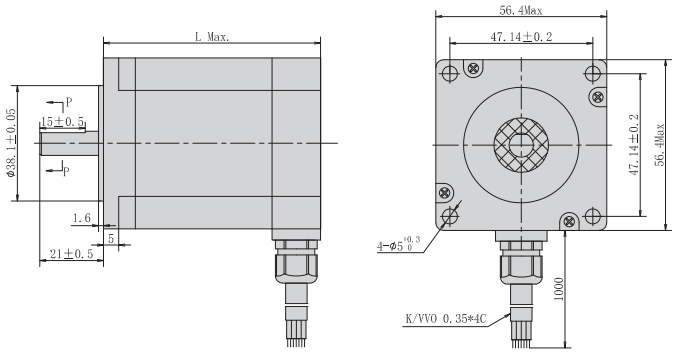

Series	L	Mass
	mm (in.)	kg (lb.)
PHP57S66	66 (2.60)	0.65 (1.43)
PHP57S86	86 (3.39)	1.05 (2.31)

PHP60S Series

Key Features

- High Torque
- Smooth Movement
- High Speed

Step Angle	1.8°
Step Angle Accuracy	±5% (full step, no load)
Resistance Accuracy	±10%
Inductance Accuracy	±20%
Temperature Rise	80 °C Max.(rated current, 2 phase on)
Ambient Temperature	-20 °C ~ +50 °C
Insulation Resistance	100 MΩ Min., 500VDC
Dielectric Strength	500 VAC for one minute
Shaft Radial Play	0.02 Max. (450 g-load)
Shaft Axial Play	0.08 Max. (450 g-load)

Specifications

Series & Length	Model Number	Holding Torque		Rated Current	Resistance per phase	Inductance per phase	Bi/Unipolar	Rotor Inertia	
		N.m	oz-in	A	ohm	mH	# of Leads	g.cm²	oz-in²
PHP60S70 70mm	PHP60S70-420-IP65	1.5	2.1	2.0	1.8	6.0	Bi (4)	340	1.870
PHP60S100 100mm	PHP60S100-430-IP65	5.0	7.0	3.0	1.3	5.0	Bi (4)	690	3.795

Mechanical Dimension

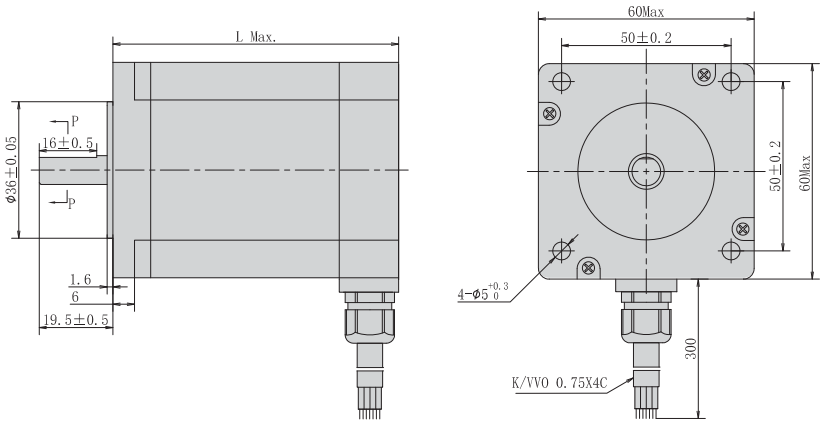

Series	L	Mass
	mm (in.)	kg (lb.)
PHP60S70	70 (2.76)	0.85 (1.87)
PHP60S100	100 (3.94)	1.40 (3.08)

PHP86S Series

Key Features

- High Torque
- Smooth Movement
- High Speed

Step Angle	1.8°
Step Angle Accuracy	±5% (full step, no load)
Resistance Accuracy	±10%
Inductance Accuracy	±20%
Temperature Rise	80 °C Max.(rated current, 2 phase on)
Ambient Temperature	-20 °C ~ +50 °C
Insulation Resistance	100 MΩ Min., 500VDC
Dielectric Strength	500 VAC for one minute
Shaft Radial Play	0.02 Max. (450 g-load)
Shaft Axial Play	0.08 Max. (450 g-load)

Specifications

Series & Length	Model Number	Holding Torque		Rated Current	Resistance per phase	Inductance per phase	Bi/Unipolar	Rotor Inertia	
		N.m	oz-in	A	ohm	mH	# of Leads	g.cm²	oz-in²
PHP86S88 88mm	PHP86S88-430-IP65	4.5	1.68	3.0	1.3	12.0	Bi (4)	2100	11.55
	PHP86S88-445-IP65	4.5	1.68	4.5	0.6	6.0	Bi (4)	2100	11.55
	PHP86S88-460-IP65	4.5	1.68	6.0	0.3	3.5	Bi (4)	2100	11.55
PHP86S126 126mm	PHP86S126-430-IP65	8.0	2.80	3.0	2.1	25.7	Bi (4)	3600	19.80
	PHP86S126-445-IP65	8.0	2.80	4.5	0.9	11.8	Bi (4)	3600	19.80
	PHP86S126-460-IP65	8.0	2.80	6.0	0.5	6.5	Bi (4)	3600	19.80

Mechanical Dimension

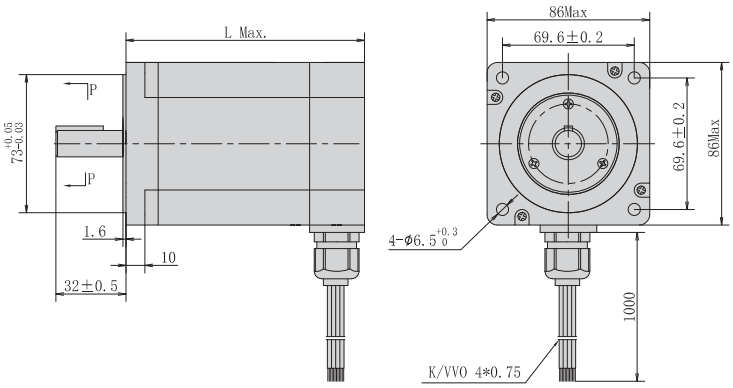

Series	L	Mass
	mm (in.)	kg (lb.)
PHP86S88	86 (3.39)	2.1 (4.62)
PHP86S126	128 (5.04)	3.6 (7.92)

E

Hollow Shaft Stepper Motor

PHH Series

NEMA 8 · PHH20Y Series 100

NEMA 11 · PHH28Y Series 101

NEMA 14 · PHH35Y Series 102

NEMA 17 · PHH42S Series 103

NEMA 23 · PHH57S Series 104

NEMA 24 · PHH60S Series 105

NEMA 34 · PHH86S Series 106

PHH20Y Series

Key Features

- Small Size
- Smooth Movement
- Low Inertia

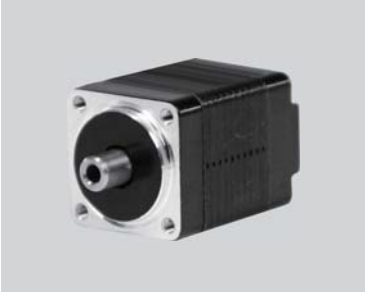

Step Angle	1.8°
Step Angle Accuracy	±5% (full step, no load)
Resistance Accuracy	±10%
Inductance Accuracy	±20%
Temperature Rise	80 °C Max.(rated current, 2 phase on)
Ambient Temperature	-20 °C ~ +50 °C
Insulation Resistance	100 MΩ Min., 500VDC
Dielectric Strength	500 VAC for one minute
Shaft Radial Play	0.02 Max. (450 g-load)
Shaft Axial Play	0.08 Max. (450 g-load)

Specifications

- Bi-polar

Series & Length	Model Number	Holding Torque		Rated Current	Resistance per phase	Inductance per phase	Detent Torque		Rotor Inertia	
		N.cm	oz-in	A	ohm	mH	N.cm	oz-in	g.cm²	oz-in²
PHH20Y28 28mm	PHH20Y28-406	1.4	1.96	0.6	3.2	0.9	0.2	0.28	2.5	0.014
PHH20Y34 34mm	PHH20Y34-406	1.8	2.52	0.6	4.5	1.2	0.3	0.42	3.2	0.018
PHH20Y40 40mm	PHH20Y40-406	2.4	3.36	0.6	5.8	1.6	0.5	0.7	4.5	0.025

Mechanical Dimension

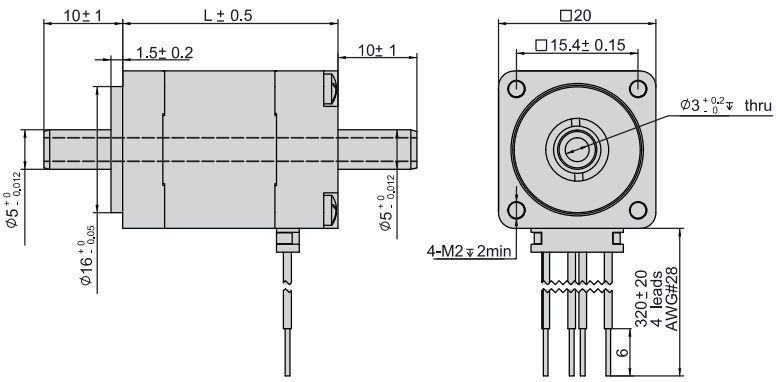

Series	L	Mass
	mm (in.)	g (lb.)
PHH20Y28	28 (1.10)	50 (0.11)
PHH20Y34	34 (1.33)	70 (0.15)
PHH20Y40	40 (1.57)	82 (0.18)

PHH28Y Series

Key Features

- Small Size
- Smooth Movement
- Low Inertia

Step Angle	1.8°
Step Angle Accuracy	±5% (full step, no load)
Resistance Accuracy	±10%
Inductance Accuracy	±20%
Temperature Rise	80 °C Max.(rated current, 2 phase on)
Ambient Temperature	-20 °C ~ +50 °C
Insulation Resistance	100 MΩ Min., 500VDC
Dielectric Strength	500 VAC for one minute
Shaft Radial Play	0.02 Max. (450 g-load)
Shaft Axial Play	0.08 Max. (450 g-load)

Specifications

- Bi-polar

Series & Length	Model Number	Holding Torque		Rated Current	Resistance per phase	Inductance per phase	Detent Torque		Rotor Inertia	
		N.cm	oz-in	A	ohm	mH	N.cm	oz-in	g.cm²	oz-in²
PHH28Y28 28mm	PHH28Y28-401	4.5	6.3	0.6	4.2	2.2	0.3	0.42	6	0.033
PHH28Y33 33mm	PHH28Y33-401	6.0	8.4	0.6	5.5	3.2	0.4	0.56	8	0.044
PHH28Y41 41mm	PHH28Y41-401	8.0	11.2	0.6	7.0	6.0	0.5	0.7	11	0.061
PHH28Y50 50mm	PHH28Y50-401	10	14	0.6	9.0	7.2	0.8	1.12	13	0.072

Mechanical Dimension

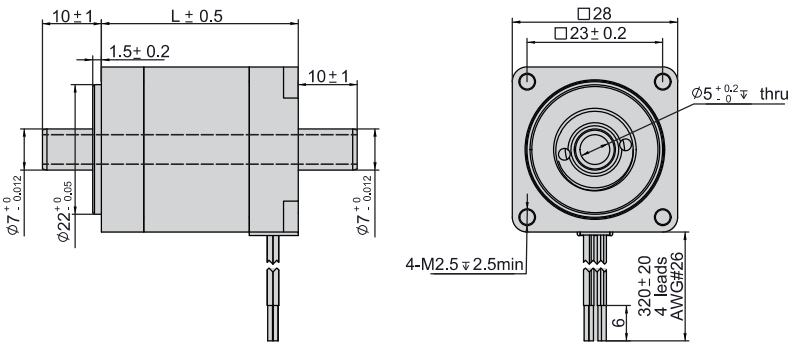

Series	L	Mass
	mm (in.)	g (lb.)
PHH28Y28	28 (1.10)	95 (0.19)
PHH28Y33	33 (1.29)	110 (0.24)
PHH28Y41	41 (1.61)	140 (0.30)
PHH28Y50	50 (1.96)	180 (0.39)

PHH35Y Series

Key Features

- Small Size
- High Speed
- High Acceleration

Step Angle	1.8°
Step Angle Accuracy	±5% (full step, no load)
Resistance Accuracy	±10%
Inductance Accuracy	±20%
Temperature Rise	80 °C Max.(rated current, 2 phase on)
Ambient Temperature	-20 °C ~ +50 °C
Insulation Resistance	100 MΩ Min., 500VDC
Dielectric Strength	500 VAC for one minute
Shaft Radial Play	0.02 Max. (450 g-load)
Shaft Axial Play	0.08 Max. (450 g-load)

Specifications

- Bi-polar

Series & Length	Model Number	Holding Torque		Rated Current	Resistance per phase	Inductance per phase	Detent Torque		Rotor Inertia	
		N.cm	oz-in	A	ohm	mH	N.cm	oz-in	$g.cm^2$	$oz\text{-}in^2$
PHH35Y20 20mm	PHH35Y20-404	5	7	0.4	22	16	0.5	0.7	9	0.050
PHH35Y26 26mm	PHH35Y26-402	10	14	0.8	4.2	4.5	0.6	0.6	10	0.055
PHH35Y28 28mm	PHH35Y28-402	12	16.8	0.8	5.0	5.0	0.8	0.84	11	0.061
PHH35Y34 34mm	PHH35Y34-402	18	25.2	0.8	6.5	9.8	1.0	1.4	13	0.072
PHH35Y42 42mm	PHH35Y42-402	22	30.8	0.8	10.5	13	1.5	2.1	22	0.121
PHH35Y52 52mm	PHH35Y52-404	30	42	1.8	2.5	5.0	2.0	2.8	26	0.143

Mechanical Dimension

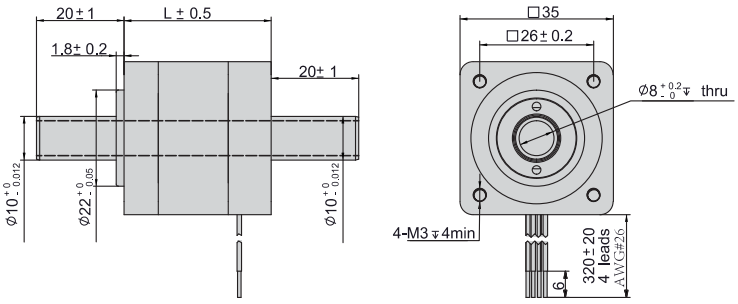

Series	L	Mass
	mm (in.)	g (lb.)
PHH35Y20	20 (0.79)	90 (0.20)
PHH35Y26	26 (1.02)	110 (0.24)
PHH35Y28	28 (1.10)	120 (0.26)
PHH35Y34	34 (1.34)	160 (0.35)
PHH35Y42	42 (1.65)	200 (0.44)
PHH35Y52	52 (2.05)	230 (0.51)

PHH42S Series

Key Features

- Small Size
- High Accuracy
- Low Inertia

Step Angle	1.8°
Step Angle Accuracy	±5% (full step, no load)
Resistance Accuracy	±10%
Inductance Accuracy	±20%
Temperature Rise	80 °C Max.(rated current, 2 phase on)
Ambient Temperature	-20 °C ~ +50 °C
Insulation Resistance	100 MΩ Min., 500VDC
Dielectric Strength	500 VAC for one minute
Shaft Radial Play	0.02 Max. (450 g-load)
Shaft Axial Play	0.08 Max. (450 g-load)

Specifications

- Bi-polar

Series & Length	Model Number	Holding Torque		Rated Current	Resistance per phase	Inductance per phase	Detent Torque		Rotor Inertia	
		N.cm	oz-in	A	ohm	mH	N.cm	oz-in	g.cm²	oz-in²
PHH42S20 20mm	PHH42S20-410	10	14	0.8	3.8	4.5	1.0	1.4	24	0.132
PHH42S28 28mm	PHH42S28-406	12	16.8	0.6	8.0	10	1.2	1.68	30	0.165
PHH42S34 34mm	PHH42S34-401	28	39.2	1.3	2.4	2.8	1.6	2.24	34	0.187
PHH42S40 40mm	PHH42S40-402	40	56	1.7	1.5	2.8	2.2	3.08	54	0.297
PHH42S48 48mm	PHH42S48-403	52	72.8	2.3	1.2	1.6	2.6	3.64	68	0.374
PHH42S60 60mm	PHH42S60-403	70	98	2.3	1.4	2.5	3.6	5.04	80	0.440
PHH42S63 63mm	PHH42S63-403	80	112	2.3	1.5	2.2	4.0	5.6	85	0.468

Mechanical Dimension

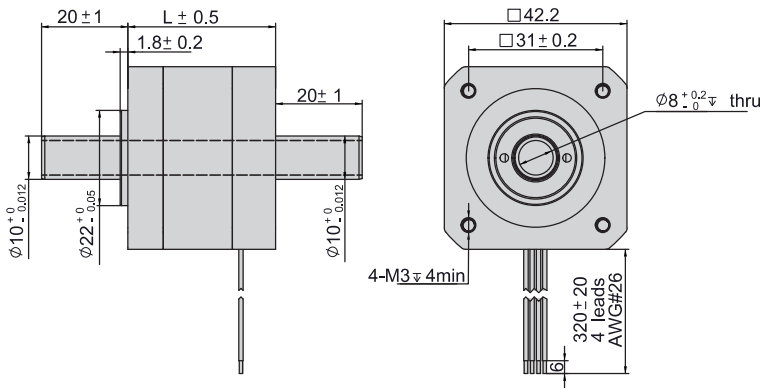

Series	L	Mass
	mm (in.)	g (lb.)
PHH42S20	20 (0.79)	120 (0.26)
PHH42S28	28 (1.10)	150 (0.33)
PHH42S34	34 (1.34)	220 (0.49)
PHH42S40	40 (1.57)	280 (0.62)
PHH42S48	48 (1.89)	350 (0.77)
PHH42S60	60 (2.36)	480 (1.06)
PHH42S63	63 (2.48)	500 (1.10)

PHH57S Series

Key Features

- High Torque
- Smooth Movement
- High Speed

Step Angle	1.8°
Step Angle Accuracy	±5% (full step, no load)
Resistance Accuracy	±10%
Inductance Accuracy	±20%
Temperature Rise	80 °C Max.(rated current, 2 phase on)
Ambient Temperature	-20 °C ~ +50 °C
Insulation Resistance	100 MΩ Min., 500VDC
Dielectric Strength	500 VAC for one minute
Shaft Radial Play	0.02 Max. (450 g-load)
Shaft Axial Play	0.08 Max. (450 g-load)

Specifications

- Bi-polar

Series & Length	Model Number	Holding Torque		Rated Current	Resistance per phase	Inductance per phase	Detent Torque		Rotor Inertia	
		N.cm	oz-in	A	ohm	mH	N.cm	oz-in	g.cm²	oz-in²
PHH57S41 41mm	PHH57S41-420	55	77	2.0	1.2	2.5	2.5	3.5	150	0.825
PHH57S45 51mm	PHH57S45-425	80	112	2.5	1.0	2.2	2.8	3.92	190	1.045
PHH57S51 51mm	PHH57S51-425	90	126	2.5	1.2	3.2	3.0	4.2	230	1.265
PHH57S56 56mm	PHH57S56-430	110	154	3.0	0.8	2.4	3.5	4.9	280	1.540
PHH57S64 64mm	PHH57S64-430	150	210	3.0	0.8	2.3	5.0	7	380	2.090
PHH57S76 76mm	PHH57S76-430	180	252	3.0	1.0	3.5	6.0	8.4	440	2.420
PHH57S100 100mm	PHH57S100-404	250	350	4.2	0.8	3.0	10	14	680	3.740
PHH57S112 112mm	PHH57S112-404	280	392	4.2	0.9	3.8	12	16.8	800	4.400

Mechanical Dimension

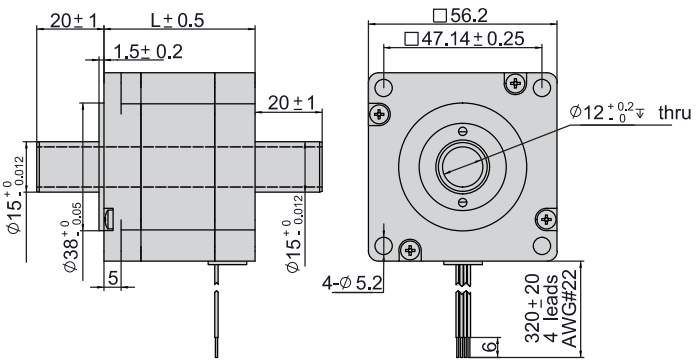

Series	L	Mass
	mm (in.)	g (lb.)
PHH57S41	41 (1.61)	470 (1.04)
PHH57S51	51 (1.29)	590 (1.30)
PHH57S56	56 (2.01)	680 (1.50)
PHH57S76	76 (2.95)	1050 (2.31)

PHH60S Series

Key Features

- High Torque
- Smooth Movement
- High Speed

Step Angle	1.8°
Step Angle Accuracy	±5% (full step, no load)
Resistance Accuracy	±10%
Inductance Accuracy	±20%
Temperature Rise	80 °C Max.(rated current, 2 phase on)
Ambient Temperature	-20 °C ~ +50 °C
Insulation Resistance	100 MΩ Min., 500VDC
Dielectric Strength	500 VAC for one minute
Shaft Radial Play	0.02 Max. (450 g-load)
Shaft Axial Play	0.08 Max. (450 g-load)

Specifications

- Bi-polar

Series & Length	Model Number	Holding Torque		Rated Current	Resistance per phase	Inductance per phase	Detent Torque		Rotor Inertia	
		N.cm	oz-in	A	ohm	mH	N.cm	oz-in	$g.cm^2$	$oz\text{-}in^2$
PHH60S41 41mm	PHH60S41-420	64	89.6	2.0	1.2	2.5	3.0	4.2	180	0.990
PHH60S45 45mm	PHH60S45-425	85	119	2.5	1.0	2.2	3.5	4.9	200	1.100
PHH60S51 51mm	PHH60S51-425	140	196	2.5	1.2	3.2	4.0	5.6	250	1.375
PHH60S56 56mm	PHH60S56-430	160	224	3.0	0.8	2.4	4.0	5.6	350	1.925
PHH60S64 64mm	PHH60S64-430	180	252	3.0	0.8	2.3	5.0	7	450	2.475
PHH60S76 76mm	PHH60S76-404	220	308	4.2	0.6	1.8	7.0	9.8	550	3.025
PHH60S90 90mm	PHH60S90-404	260	364	4.2	0.8	3.0	12.0	16.8	780	4.290

Mechanical Dimension

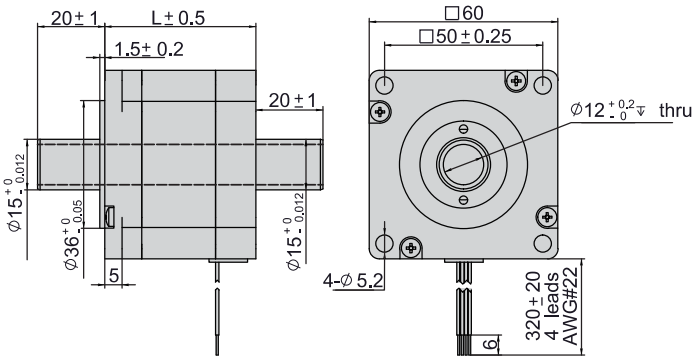

Series	L	Mass
	mm (in.)	g (lb.)
PHH60S41	41 (1.61)	500 (1.10)
PHH60S45	45 (1.77)	550 (1.21)
PHH60S51	51 (2.01)	600 (1.32)
PHH60S56	56 (2.20)	700 (1.54)
PHH60S64	64 (2.52)	950 (2.09)
PHH60S76	76 (2.99)	1150 (2.53)
PHH60S90	90 (3.54)	1400 (3.08)

PHH86S Series

Key Features

- High Torque
- Smooth Movement
- High Speed

Step Angle	1.8°
Step Angle Accuracy	±5% (full step, no load)
Resistance Accuracy	±10%
Inductance Accuracy	±20%
Temperature Rise	80 °C Max.(rated current)
Ambient Temperature	-20 °C ~ +50 °C
Insulation Resistance	100 MΩ Min., 500VDC
Dielectric Strength	820 VAC for one minute
Shaft Radial Play	0.02 Max. (450 g-load)
Shaft Axial Play	0.08 Max. (450 g-load)

Specifications

- 8 wires

Model & Length	Model Number	Connection	Holding Torque		Rated Current	Resistance per phase	Inductance per phase	Detent Torque		Rotor Inertia	
			N.cm	oz-in	A	ohm	mH	N.cm	oz-in	kg.cm²	oz-in²
PHH86S66 66mm	PHH86S66-456	Bipolar-Parallel	310	434	5.6	0.3	1.6	5.5	7.7	0.85	4.675
		Bipolar-Series	310	434	2.8	1.2	6.4				
PHH86S78 78mm	PHH86S78-456	Bipolar-Parallel	420	588	5.6	0.35	3.0	6.5	9.1	1.05	5.775
		Bipolar-Series	420	588	2.8	1.4	12.0				
PHH86S98 92mm	PHH86S98-456	Bipolar-Parallel	650	910	5.6	0.5	4.1	9.5	13.3	1.55	8.525
		Bipolar-Series	650	910	2.8	2.0	16.4				
PHH86S114 114mm	PHH86S114-456	Bipolar-Parallel	820	1148	5.6	0.55	5.5	12.5	17.5	1.80	9.900
		Bipolar-Series	820	1148	2.8	2.2	22.0				
PHH86S126 126mm	PHH86S126-456	Bipolar-Parallel	900	1260	5.6	0.65	5.8	18.5	25.9	2.20	12.10
		Bipolar-Series	900	1260	2.8	2.6	23.2				
PHH86S150 150mm	PHH86S150-456	Bipolar-Parallel	1200	1680	5.6	0.7	9.2	24.5	34.3	2.50	13.75
		Bipolar-Series	1200	1680	2.8	2.8	36.8				

Mechanical Dimension

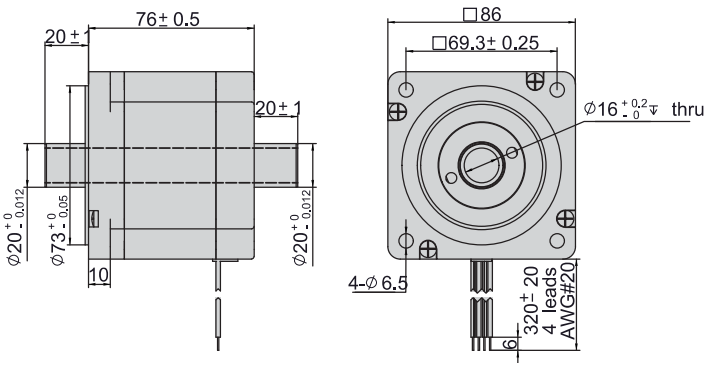

Series	L	Mass
	mm (in.)	kg (lb.)
PHH86S66	66 (2.60)	2.0 (4.40)
PHH86S78	78 (3.07)	2.5 (5.50)
PHH86S98	98 (3.86)	3.0 (6.60)
PHH86S114	114 (4.49)	4.0 (8.80)
PHH86S126	126 (4.96)	4.5 (9.90)
PHH86S150	150 (5.91)	5.0 (11.0)

F

Stepper Motor With Brake

PHB Series

NEMA 14 · PHB35S Series 108
NEMA 17 · PHB42S Series 109
NEMA 23 · PHB57S Series 110
NEMA 24 · PHB60S Series 111
NEMA 34 · PHB86S Series 112

PHB35S Series

Key Features

- Small Size
- High Accuracy
- Low Inertia

Step Angle	1.8°
Step Angle Accuracy	±5% (full step, no load)
Resistance Accuracy	±10%
Inductance Accuracy	±20%
Temperature Rise	80 °C Max.(rated current, 2 phase on)
Ambient Temperature	-20 °C ~ +50 °C
Insulation Resistance	100 MΩ Min., 500VDC
Dielectric Strength	500 VAC for one minute
Shaft Radial Play	0.02 Max. (450 g-load)
Shaft Axial Play	0.08 Max. (450 g-load)

Specifications

- Bi-polar

Series & Length	Model Number	Holding Torque		Rated Current	Resistance per phase	Inductance per phase	Detent Torque		Rotor Inertia	
		N.cm	oz-in	A	ohm	mH	N.cm	oz-in	$g.cm^2$	$oz\text{-}in^2$
PHB35S34B 34mm	PHB35S34B-402	18	25.2	0.8	6.5	9.8	1.0	1.4	13	0.072
PHB35S42B 42mm	PHB35S42B-402	22	30.8	0.8	10.5	13	1.5	2.1	22	0.121
PHB35S52B 52mm	PHB35S52B-404	30	42	1.8	2.5	5.0	2.0	2.8	26	0.143

Mechanical Dimension

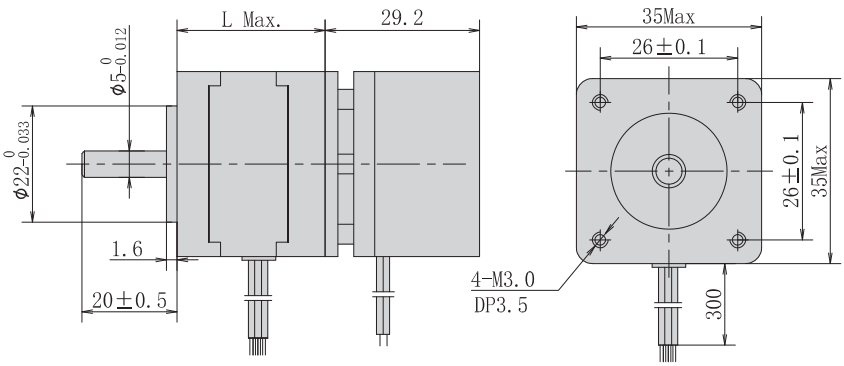

Series	L	Mass
	mm (in.)	kg (lb.)
PHB35S34B	34 (1.34)	160 (0.35)
PHB35S42B	42 (1.65)	200 (0.44)
PHB35S52B	52 (2.05)	230 (0.51)

PHB42S Series

Key Features

- Small Size
- High Accuracy
- Low Inertia

Step Angle	1.8°
Step Angle Accuracy	±5% (full step, no load)
Resistance Accuracy	±10%
Inductance Accuracy	±20%
Temperature Rise	80 °C Max.(rated current, 2 phase on)
Ambient Temperature	-20 °C ~ +50 °C
Insulation Resistance	100 MΩ Min., 500VDC
Dielectric Strength	500 VAC for one minute
Shaft Radial Play	0.02 Max. (450 g-load)
Shaft Axial Play	0.08 Max. (450 g-load)

Specifications

- Bi-polar

Series & Length	Model Number	Holding Torque		Rated Current	Resistance per phase	Inductance per phase	Detent Torque		Rotor Inertia	
		N.cm	oz-in	A	ohm	mH	N.cm	oz-in	g.cm²	oz-in²
PHB42S20B 20mm	PHB42S20B-410	10	14	0.8	3.8	4.5	1.0	1.4	24	0.132
PHB42S28B 28mm	PHB42S28B-406	12	16.8	0.6	8.0	10	1.2	1.68	30	0.165
PHB42S34B 34mm	PHB42S34B-432	28	39.2	1.7	1.2	1.8	1.6	2.24	34	0.187
PHB42S40B 40mm	PHB42S40B-402	40	56	1.7	1.5	2.8	2.2	3.08	54	0.297
PHB42S48B 48mm	PHB42S48B-402	52	72.8	1.7	1.8	3.2	2.6	3.64	68	0.374
PHB42S60B 60mm	PHB42S60B-403	70	98	2.3	1.4	2.5	3.6	5.04	80	0.440
PHB42S63B 63mm	PHB42S63B-403	80	112	2.3	1.5	2.2	4.0	5.6	85	0.468

Mechanical Dimension

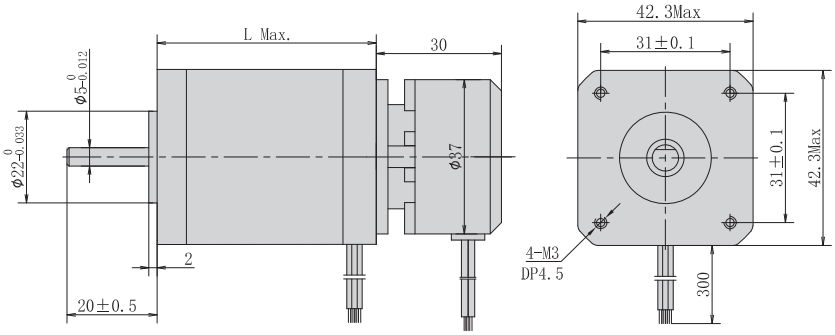

Series	L	Mass
	mm (in.)	g (lb.)
PHB42S20B	20 (0.79)	120 (0.26)
PHB42S28B	28 (1.10)	150 (0.33)
PHB42S34B	34 (1.34)	220 (0.49)
PHB42S40B	40 (1.57)	280 (0.62)
PHB42S48B	48 (1.89)	350 (0.77)
PHB42S60B	60 (2.36)	480 (1.06)
PHB42S63B	63 (2.48)	500 (1.10)

PHB57S Series

Key Features

- High Torque
- Smooth Movement
- High Speed

Step Angle	1.8°
Step Angle Accuracy	±5% (full step, no load)
Resistance Accuracy	±10%
Inductance Accuracy	±20%
Temperature Rise	80 °C Max.(rated current, 2 phase on)
Ambient Temperature	-20 °C ~ +50 °C
Insulation Resistance	100 MΩ Min., 500VDC
Dielectric Strength	500 VAC for one minute
Shaft Radial Play	0.02 Max. (450 g-load)
Shaft Axial Play	0.08 Max. (450 g-load)

Specifications

- Bi-polar

Series & Length	Model Number	Holding Torque		Rated Current	Resistance per phase	Inductance per phase	Detent Torque		Rotor Inertia	
		N.cm	oz-in	A	ohm	mH	N.cm	oz-in	g.cm²	oz-in²
PHB57S41B 41mm	PHB57S41B-420	55	77	2.0	1.2	2.5	2.5	3.5	150	0.825
PHB57S45B 51mm	PHB57S45B-425	80	112	2.5	1.0	2.2	2.8	3.92	190	1.045
PHB57S51B 51mm	PHB57S51B-425	90	126	2.5	1.2	3.2	3.0	4.2	230	1.265
PHB57S56B 56mm	PHB57S56B-404	110	154	4.2	0.4	1.2	3.5	4.9	280	1.540
PHB57S64B 64mm	PHB57S64B-404	150	210	4.2	0.55	1.2	5.0	7	380	2.090
PHB57S76B 76mm	PHB57S76B-404	180	252	4.2	0.6	1.8	6.0	8.4	440	2.420
PHB57S100B 100mm	PHB57S100B-404	250	350	4.2	0.8	3.0	10	14	680	3.740
PHB57S112B 112mm	PHB57S112B-404	280	392	4.2	0.9	3.8	12	16.8	800	4.400

Mechanical Dimension

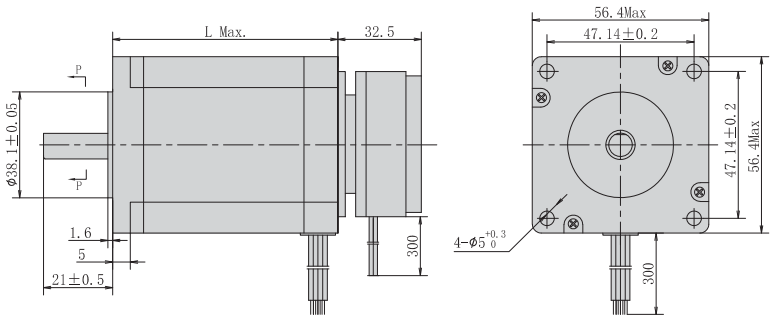

Series	L	Mass
	mm (in.)	g (lb.)
PHB57S41B	41 (1.61)	470 (1.04)
PHB57S51B	51 (1.29)	590 (1.30)
PHB57S56B	56 (2.01)	680 (1.50)
PHB57S76B	76 (2.95)	1050 (2.31)

PHB60S Series

Key Features

- Small Size
- Smooth Movement
- High Torque

Step Angle	1.8°
Step Angle Accuracy	±5% (full step, no load)
Resistance Accuracy	±10%
Inductance Accuracy	±20%
Temperature Rise	80 °C Max.(rated current, 2 phase on)
Ambient Temperature	-20 °C ~ +50 °C
Insulation Resistance	100 MΩ Min., 500VDC
Dielectric Strength	500 VAC for one minute
Shaft Radial Play	0.02 Max. (450 g-load)
Shaft Axial Play	0.08 Max. (450 g-load)

Specifications

- Bi-polar

Series & Length	Model Number	Holding Torque		Rated Current	Resistance per phase	Inductance per phase	Detent Torque		Rotor Inertia	
		N.cm	oz-in	A	ohm	mH	N.cm	oz-in	g.cm²	oz-in²
PHB60S41B 41mm	PHB60S41B-420	64	89.6	2.0	1.2	2.5	3.0	4.2	180	0.990
PHB60S45B 45mm	PHB60S45B-425	85	119	2.5	1.0	2.2	3.5	4.9	200	1.100
PHB60S51B 51mm	PHB60S51B-425	140	196	2.5	1.2	3.2	4.0	5.6	250	1.375
PHB60S56B 56mm	PHB60S56B-404	160	224	4.2	0.4	1.2	4.0	5.6	350	1.925
PHB60S64B 64mm	PHB60S64B-404	180	252	4.2	0.55	1.2	5.0	7	450	2.475
PHB60S76B 76mm	PHB60S76B-404	220	308	4.2	0.6	1.8	7.0	9.8	550	3.025
PHB60S90B 90mm	PHB60S90B-404	260	364	4.2	0.8	3.0	12.0	16.8	780	4.290

Mechanical Dimension

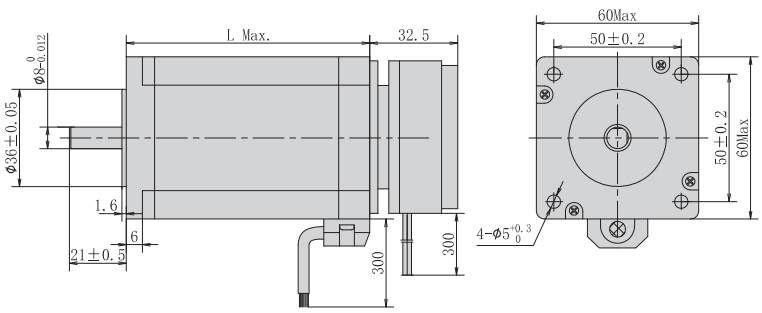

Series	L	Mass
	mm (in.)	g (lb.)
PHB60S41B	41 (1.61)	500 (1.10)
PHB60S45B	45 (1.77)	550 (1.21)
PHB60S51B	51 (2.01)	600 (1.32)
PHB60S56B	56 (2.20)	700 (1.54)
PHB60S64B	64 (2.52)	950 (2.09)
PHB60S76B	76 (2.99)	1150 (2.53)
PHB60S90B	90 (3.54)	1400 (3.08)

PHB86S Series

Key Features

- High Torque
- Smooth Movement
- High Speed

Step Angle	1.8°
Step Angle Accuracy	±5% (full step, no load)
Resistance Accuracy	±10%
Inductance Accuracy	±20%
Temperature Rise	80 °C Max.(rated current)
Ambient Temperature	-20 °C ~ +50 °C
Insulation Resistance	100 MΩ Min., 500VDC
Dielectric Strength	820 VAC for one minute
Shaft Radial Play	0.02 Max. (450 g-load)
Shaft Axial Play	0.08 Max. (450 g-load)

Specifications

- 8 wires

Model & Length	Model Number	Connection	Holding Torque		Rated Current	Resistance per phase	Inductance per phase	Detent Torque		Rotor Inertia	
			N.cm	oz-in	A	ohm	mH	N.cm	oz-in	kg.cm²	oz-in²
PHB86S66B 66mm	PHB86S66B-802	Bipolar-Parallel	310	434	5.6	0.3	1.6	5.5	7.7	0.85	4.675
		Bipolar-Series	310	434	2.8	1.2	6.4				
PHB86S78B 78mm	PHB86S78B-802	Bipolar-Parallel	420	588	5.6	0.35	3.0	6.5	9.1	1.05	5.775
		Bipolar-Series	420	588	2.8	1.4	12.0				
PHB86S98B 92mm	PHB86S98B-802	Bipolar-Parallel	650	910	5.6	0.5	4.1	9.5	13.3	1.55	8.525
		Bipolar-Series	650	910	2.8	2.0	16.4				
PHB86S114B 114mm	PHB86S114B-802	Bipolar-Parallel	820	1148	5.6	0.55	5.5	12.5	17.5	1.80	9.900
		Bipolar-Series	820	1148	2.8	2.2	22.0				
PHB86S126B 126mm	PHB86S126B-802	Bipolar-Parallel	900	1260	5.6	0.65	5.8	18.5	25.9	2.20	12.10
		Bipolar-Series	900	1260	2.8	2.6	23.2				
PHB86S150B 150mm	PHB86S150B-802	Bipolar-Parallel	1200	1680	5.6	0.7	9.2	24.5	34.3	2.50	13.75
		Bipolar-Series	1200	1680	2.8	2.8	36.8				

Mechanical Dimension

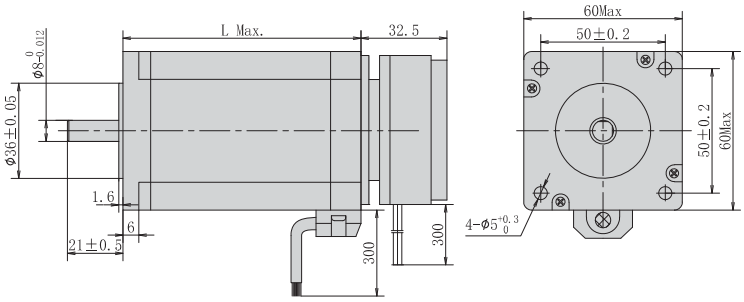

Series	L	Mass
	mm (in.)	kg (lb.)
PHB86S66B	66 (2.60)	2.0 (4.40)
PHB86S78B	78 (3.07)	2.5 (5.50)
PHB86S98B	98 (3.86)	3.0 (6.60)
PHB86S114B	114 (4.49)	4.0 (8.80)
PHB86S126B	126 (4.96)	4.5 (9.90)
PHB86S150B	150 (5.91)	5.0 (11.0)

G

Pancake Stepper Motor

PHB Series

PHB26K Series	114
PHB28S Series	115
PHB36D Series	116
PHB46S Series	117

PHB26K Series

Key Features

- 35% More Torque
- Quieter & Smoother
- Longer Life Time

Step Angle	1.8°
Step Angle Accuracy	±5% (full step, no load)
Resistance Accuracy	±10%
Inductance Accuracy	±20%
Temperature Rise	80 °C Max.(rated current, 2 phase on)
Ambient Temperature	-20 °C ~ +50 °C
Insulation Resistance	100 MΩ Min., 500VDC
Dielectric Strength	500 VAC for one minute
Shaft Radial Play	0.02 Max. (450 g-load)
Shaft Axial Play	0.08 Max. (450 g-load)

Specifications

- Bi-polar

Series & Length	Model Number	Holding Torque		Rated Current	Resistance per phase	Inductance per phase	Lead Wire	Rotor Inertia	
		N.cm	oz-in	A	ohm	mH	(No.)	$g.cm^2$	$oz\text{-}in^2$
PHB26K13 13.5mm	PHB26K13-420	1.2	1.68	0.3	18	3.2	4	2.5	0.014
PHB26K15 13.5mm	PHB26K15-420	1.5	1.68	0.3	24	3.5	4	3.2	0.018
PHB26K20 13.5mm	PHB26K20-420	3.2	1.68	0.9	4.2	0.9	4	5.2	0.029

Mechanical Dimension

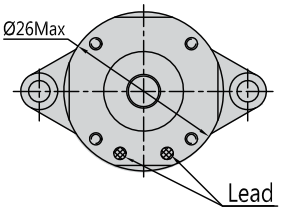

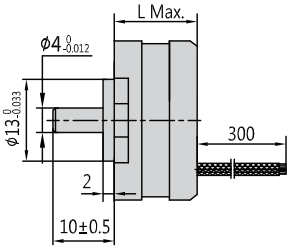

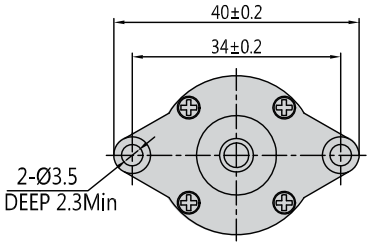

Series	L	Mass
	mm (in.)	g (lb.)
PHB26K13	13.5 (0.53)	50 (0.11)
PHB26K15	15 (0.59	65 (0.14)
PHB26K20	20 (0.79)	75 (0.17)

PHB28S Series

Key Features

- 35% More Torque
- Quieter & Smoother
- Longer Life

Step Angle	1.8°
Step Angle Accuracy	±5% (full step, no load)
Resistance Accuracy	±10%
Inductance Accuracy	±20%
Temperature Rise	80 °C Max.(rated current, 2 phase on)
Ambient Temperature	-20 °C ~ +50 °C
Insulation Resistance	100 MΩ Min., 500VDC
Dielectric Strength	600 VAC for one minute
Shaft Radial Play	0.02 Max. (400 g-load)
Shaft Axial Play	0.08 Max. (400 g-load)

Specifications

Series & Length	Model Number	Holding Torque		Rated Current	Resistance per phase	Inductance per phase	Detent Torque		Rotor Inertia	
		N.cm	oz-in	A	ohm	mH	N.cm	oz-in	$g.cm^2$	$oz\text{-}in^2$
PHB28S 9.4mm	PHB28S10F	1	1.4	0.5	3.7	0.88	0.1	0.14	1.7	0.009

Mechanical Dimension

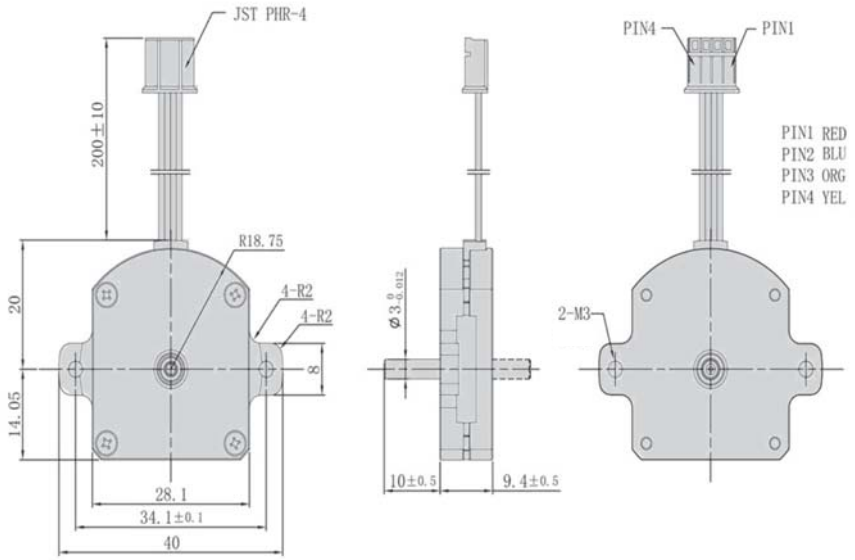

PHB36D Series

Key Features

- Conpact Size
- Quieter & Smoother
- Longer Life Time

Step Angle	1.8°
Step Angle Accuracy	±5% (full step, no load)
Resistance Accuracy	±10%
Inductance Accuracy	±20%
Temperature Rise	80 °C Max.(rated current, 2 phase on)
Ambient Temperature	-20 °C ~ +50 °C
Insulation Resistance	100 MΩ Min., 500VDC
Dielectric Strength	500 VAC for one minute
Shaft Radial Play	0.02 Max. (450 g-load)
Shaft Axial Play	0.08 Max. (450 g-load)

Specifications

- Bi-polar

Series & Length	Model Number	Holding Torque		Rated Current	Resistance per phase	Inductance per phase	Detent Torque		Rotor Inertia	
		N.cm	oz-in	A	ohm	mH	N.cm	oz-in	g.cm²	oz-in²
PHB36D13 13.5mm	PHB36D13-403	3.2	4.48	0.3	19	9	0.3	0.42	3	0.017
PHB36D15 15.2mm	PHB36D15-403	4.2	5.88	0.3	16.8	8.2	0.5	0.7	4	0.022
PHB36D20 19.7mm	PHB36D20-445	9.0	12.6	0.45	14.5	12.5	0.8	1.12	6	0.033

Mechanical Dimension

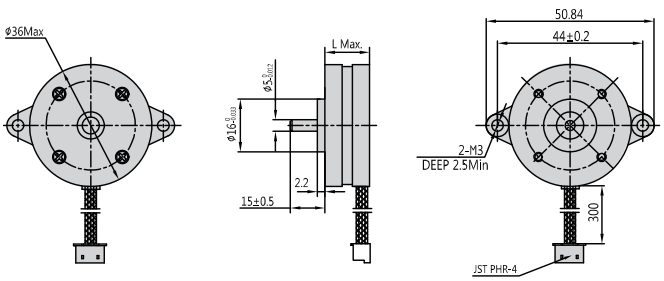

Series	L	Mass
	mm (in.)	g (lb.)
PHB36D13	13.5 (0.53)	40 (0.09)
PHB36D15	15.2 (0.60)	55 (0.12)
PHB36D20	19.7 (0.78)	95 (0.21)

PHB46S Series

Key Features

- Conpact Size
- Quieter & Smoother
- Longer Life Time

Step Angle	1.8°
Step Angle Accuracy	±5% (full step, no load)
Resistance Accuracy	±10%
Inductance Accuracy	±20%
Temperature Rise	80 °C Max.(rated current, 2 phase on)
Ambient Temperature	-20 °C ~ +50 °C
Insulation Resistance	100 MΩ Min., 500VDC
Dielectric Strength	600 VAC for one minute
Shaft Radial Play	0.02 Max. (450 g-load)
Shaft Axial Play	0.08 Max. (450 g-load)

Specifications

Series & Length	Model Number	Holding Torque		Rated Current	Resistance per phase	Inductance per phase	Detent Torque		Rotor Inertia	
		N.cm	oz-in	A	ohm	mH	N.cm	oz-in	g.cm²	oz-in²
PHB46S 15.3mm	PHB46S16F	8	11.2	1.0	3.2	2.5	0.6	0.84	11	0.02

Mechanical Dimension

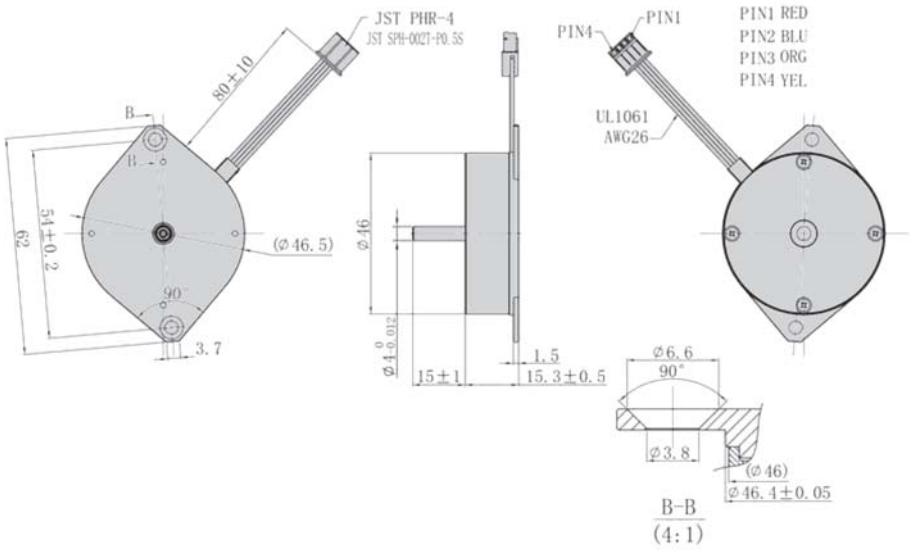

H

PM Stepper Motor

PPMS Series

Description	119
Applications	119
Part Number	119
Standard Versions	119
Ø10mm Base Size · PPMS10 Series	120
Ø15mm Base Size · PPMS15 Series	121
Ø20mm Base Size · PPMS20 Series	122
Ø25mm Base Size · PPMS25 Series	123
Ø35mm Base Size · PPMS35 Series	124
Ø42mm Base Size · PPMS42 Series	125
Ø49mm Base Size · PPMS49 Series	126
Ø57mm Base Size · PPMS57 Series	127

Description

PrimoPal's PPMS series PM stepper motors feature high dynamic torque at low speed and large basic step angles. These motors are available from 10mm to 57mm in outside diameter, with standard and customized features that make this product ideal for medical, instrumentation and valve applications. Besides conventional solutions, custom housing and winding, shaft modification, linear actuator, as well as gearbox adders are also available to optimize the product's performance for you needs.

Applications

PrimoPal's PPMS series PM stepper motors are widely used in kinds of applications, such as automotive instruments, printers, scanners, copy machines, fax machines, card readers, medical equipment and other industrial & office automation equipment.

Part Number

PPMS	□□	□	□□	–	□□	□□
PrimoPal PM Stepper Motor	**Base Frame** (O.D. in mm)	**Motor Length** L: Long Type S: Short Type	**NO. of Steps per Revolution** 20: Step Angle 18° 24: Step Angle 15° 48: Step Angle 7.5°		**Electric Variation** Variety of voltage, current,etc	**Mechanical Variation** Variety of shaft, lead wire,etc

Standard Versions

	PPMS10 Series Frame Size: Ø10mm Step Angle: 18°		PPMS15 Series Frame Size: Ø15mm Step Angle: 18°
	PPMS20 Series Frame Size: Ø20mm Step Angle: 18°		PPMS25 Series Frame Size: Ø25mm Step Angle: 7.5° / 15°
	PPMS35 Series Frame Size: Ø35mm Step Angle: 7.5° / 15°		PPMS42 Series Frame Size: Ø42mm Step Angle: 7.5°
	PPMS49 Series Frame Size: Ø49mm Step Angle: 7.5°		PPMS57 Series Frame Size: Ø57mm Step Angle: 7.5°

PPMS10 Series

Key Features

- Small Size
- Smooth Movement
- Low Inertia

Step Angle Accuracy	±8%
Resistance Accuracy	±10%
Inductance Accuracy	±20%
Ambient Temperature	-10°C ~ 50°C
Insulation Resistance	100 MΩ Min.(At 500VDC)
Dielectric Strength	RMS for 2 Sec(At 650±50VAC)
Insulation Class	Class E

Specifications

Series	Model Number	Holding Torque	Rated Current	Resistance per phase	Inductance per phase	Detent Torque	Rotor Inertia	Wiring Diagram	Drawing	No. of Phase	Step Angle
		g.cm	A	ohm	mH	g.cm	g.cm²	Wdg	Fig		
PPMS10L20	PPMS10L20-01	80	0.22	15	3.0	10	<1.0	a	1, 2	2	18
	PPMS10L20-04	150	0.33	10	1.9	10	<1.0	a	1, 2	2	18
	PPMS10L20-05	160	0.5	6.6	1.2	10	<1.0	a	1, 2	2	18

Typical Outline

Fig 1

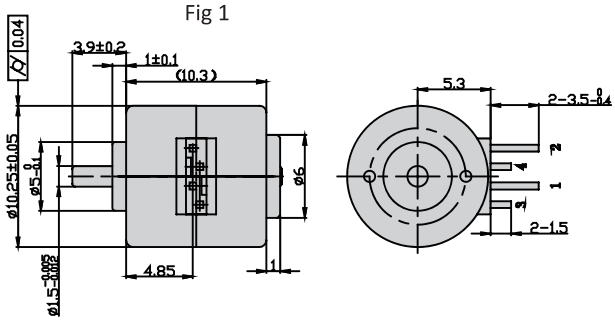

Fig 2

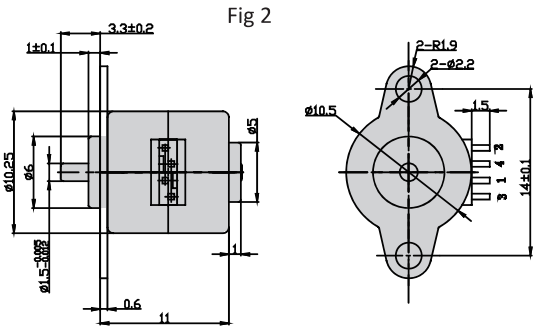

Wiring Diagram

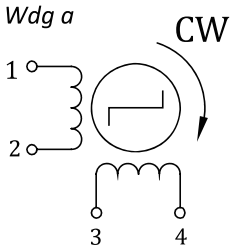

PPMS15 Series

Key Features

- Small Size
- Smooth Movement
- Low Inertia

Step Angle Accuracy	±8%
Resistance Accuracy	±10%
Inductance Accuracy	±20%
Ambient Temperature	-10°C ~ 50°C
Insulation Resistance	100 MΩ Min.(At 500VDC)
Dielectric Strength	RMS for 2 Sec(At 650±50VAC)
Insulation Class	Class E

Specifications

Series	Model Number	Holding Torque	Rated Current	Resistance per phase	Inductance per phase	Detent Torque	Rotor Inertia	Wiring Diagram	Drawing	No. of Phase	Step Angle
		g.cm	A	ohm	mH	g.cm	g.cm²	Wdg	Fig		
PPMS15L20	PPMS15L20-01	27	0.5	10	3.0	10	0.3	a	1	2	18
	PPMS15L20-02	25	0.15	50	1.9	10	0.3	a	1	2	18
	PPMS15L20-03	25	0.33	15	1.2	10	0.3	a	2	2	18
	PPMS15L20-04	25	0.24	50	1.9	10	0.3	a	2	2	18
	PPMS15L20-05	24	0.065	190	1.2	10	0.3	a	2	2	18

Typical Outline

Fig 1

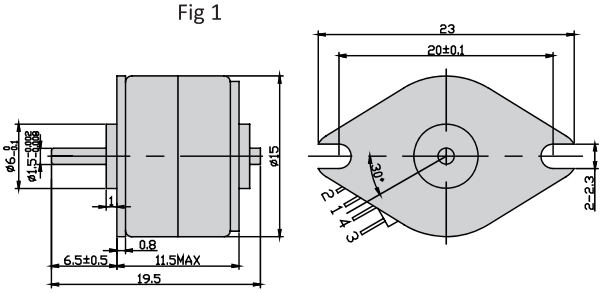

Fig 2

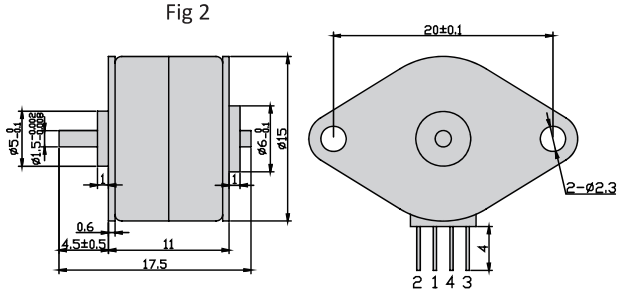

Wiring Diagram

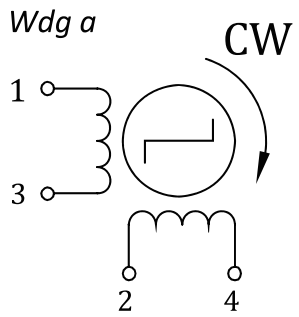

PPMS20 Series

Key Features

- High Acceleration
- Low Noise
- Low Inertia

Step Angle Accuracy	±8%
Resistance Accuracy	±10%
Inductance Accuracy	±20%
Ambient Temperature	-10°C ~ 50°C
Insulation Resistance	100 MΩ Min.(At 500VDC)
Dielectric Strength	RMS for 2 Sec(At 650±50VAC)
Insulation Class	Class E

Specifications

Series	Model Number	Holding Torque	Rated Current	Resistance per phase	Inductance per phase	Detent Torque	Rotor Inertia	Wiring Diagram	Drawing	No. of Phase	Step Angle
		g.cm	A	ohm	mH	g.cm	g.cm²	Wdg	Fig		
PPMS20L20	PPMS20L20-01	60	0.5	10	4.3	20	0.6	a	1	2	18
	PPMS20L20-02	40	0.39	13	7.4	20	0.6	b	2	2	18

Typical Outline

Fig 1

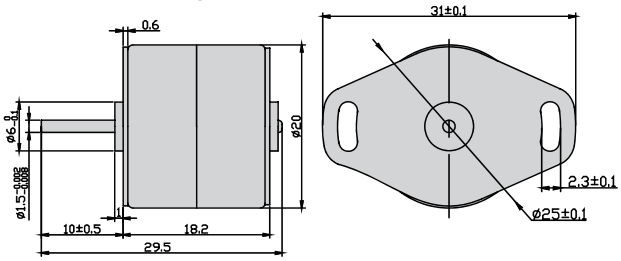

Fig 2

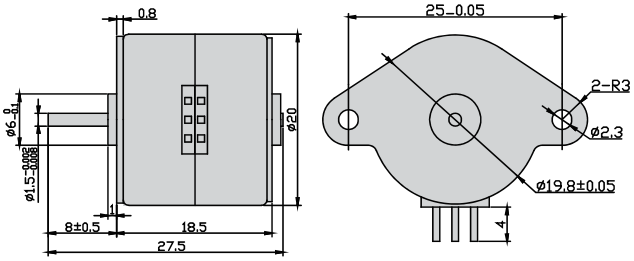

Wiring Diagram

Wdg a

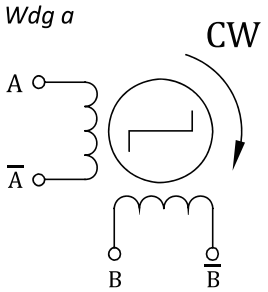

Wdg b

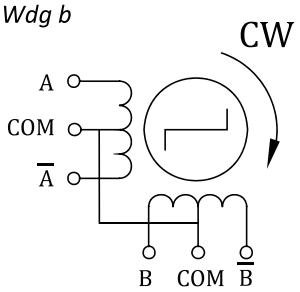

PPMS25 Series

Key Features

- High Acceleration
- Low Noise
- Low Inertia

Step Angle Accuracy	±8%
Resistance Accuracy	±10%
Inductance Accuracy	±20%
Ambient Temperature	-10°C ~ 50°C
Insulation Resistance	100 MΩ Min.(At 500VDC)
Dielectric Strength	RMS for 2 Sec(At 650±50VAC)
Insulation Class	Class E

Specifications

Series	Model Number	Holding Torque	Rated Current	Resistance per phase	Inductance per phase	Detent Torque	Rotor Inertia	Wiring Diagram	Drawing	No. of Phase	Step Angle
		g.cm	A	ohm	mH	g.cm	g.cm²	Wdg	Fig		
PPMS25S48	PPMS25S48-02	90	0.15	80	18	20	1.0	a	1	4	7.5
	PPMS25L48-01	120	0.5	10	2.1	45	1.0	a	2	4	7.5
	PPMS25L48-02	160	0.24	50	10.5	35	1.0	a	2	4	7.5
PPMS25L24	PPMS25L24-01	150	0.4	30	6	75	1.0	a	3	4	15

Typical Outline

Fig 1

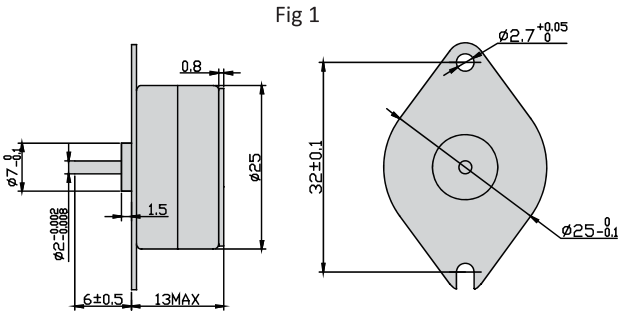

Fig 2

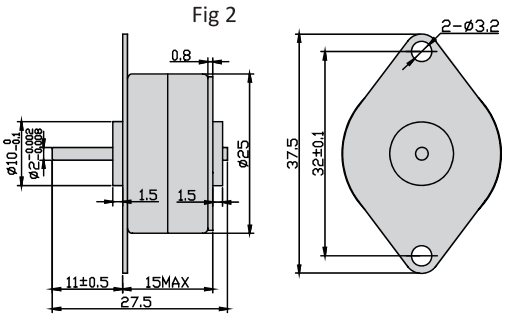

Fig 3

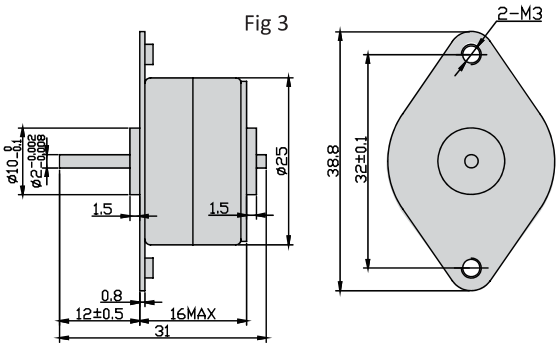

Wiring Diagram

Wdg a

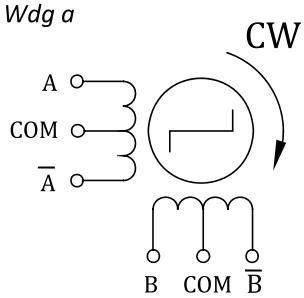

PPMS35 Series

Key Features

- Small Size
- Smooth Movement
- Low Inertia

Step Angle Accuracy	±8%
Resistance Accuracy	±10%
Inductance Accuracy	±20%
Ambient Temperature	-10°C ~ 50°C
Insulation Resistance	100 MΩ Min.(At 500VDC)
Dielectric Strength	RMS for 2 Sec(At 650±50VAC)
Insulation Class	Class E

Specifications

Series	Model Number	Holding Torque	Rated Current	Resistance per phase	Inductance per phase	Detent Torque	Rotor Inertia	Wiring Diagram	Drawing	No. of Phase	Step Angle
		g.cm	A	ohm	mH	g.cm	g.cm²	Wdg	Fig		
PPM35S48	PPM35S48-01	400	0.67	87.5	15.7	60	7.5	a	1	2	2
	PPM35S48-02	390	0.4	12.5	10.5	65	7.5	a	2	2	2
	PPM35S48-03	300	0.26	47	16.5	65	7.5	b	2	4	4
PPM35L24	PPM35L24-01	450	0.28	85	36.5	125	7.5	c	3	4	4
PPM35L48	PPM35L48-01	550	0.2	60	78	125	7.5	a	4	2	2
	PPM35L48-02	550	0.22	110	54.2	125	7.5	b	4	4	4

Typical Outline

Fig 1

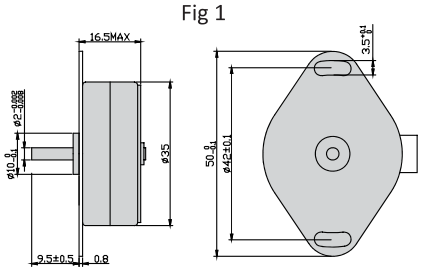

Fig 2

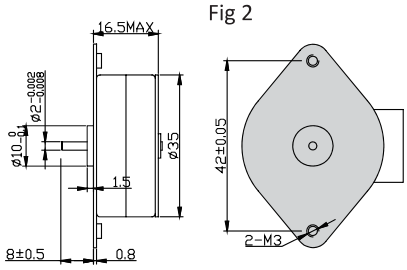

Fig 3

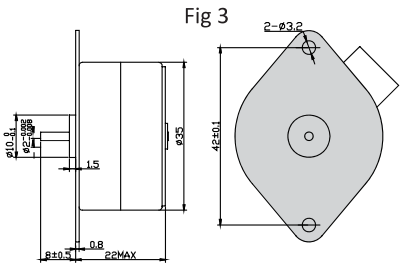

Fig 4

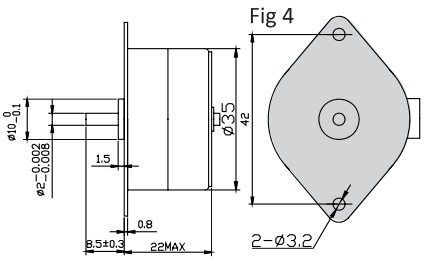

Wiring Diagram

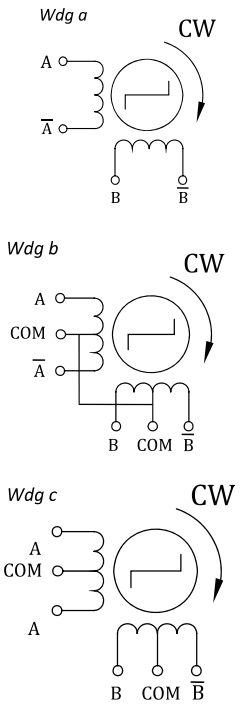

PPMS42 Series

Key Features

- Small Size
- Smooth Movement
- Low Inertia

Step Angle Accuracy	±8%
Resistance Accuracy	±10%
Inductance Accuracy	±20%
Ambient Temperature	-10°C ~ 50°C
Insulation Resistance	100 MΩ Min.(At 500VDC)
Dielectric Strength	RMS for 2 Sec(At 650±50VAC)
Insulation Class	Class E

Specifications

Series	Model Number	Holding Torque	Rated Current	Resistance per phase	Detent Torque	Rotor Inertia	Wiring Diagram	Drawing	No. of Phase	Step Angle
		g.cm	A	ohm	g.cm	g.cm²	Wdg	Fig		
PPMS42S48	PPMS42S48-01	550	0.3	40	100	9.6	b	1	4	7.5
	PPMS42S48-02	550	0.59	8.6	100	9.6	a	1	2	7.5
PPMS42L48	PPMS42L48-01	800	0.24	100	210	9.6	b	2	4	7.5
	PPMS42L48-02	800	0.2	60	210	9.6	b	1	4	15

Typical Outline

Fig 1

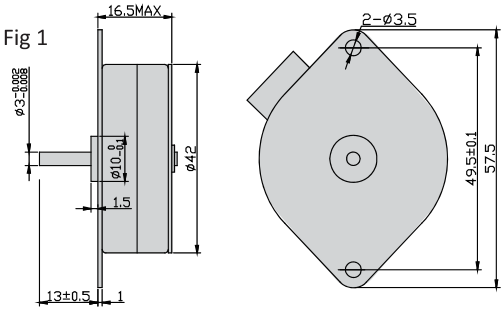

Fig 2

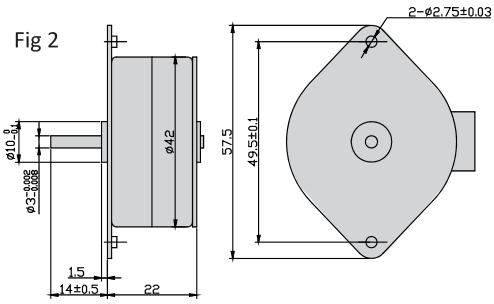

Wiring Diagram

Wdg a

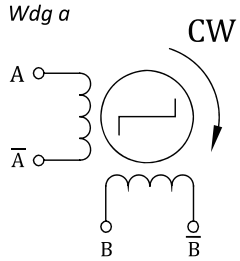

Wdg b

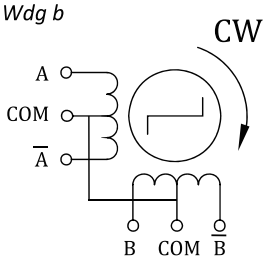

PPMS49 Series

Key Features

- Small Size
- Smooth Movement
- Low Inertia

Step Angle Accuracy	±8%
Resistance Accuracy	±10%
Inductance Accuracy	±20%
Ambient Temperature	-10°C ~ 50°C
Insulation Resistance	100 MΩ Min.(At 500VDC)
Dielectric Strength	RMS for 2 Sec(At 650±50VAC)
Insulation Class	Class E

Specifications

Series	Model Number	Holding Torque	Rated Current	Resistance per phase	Detent Torque	Rotor Inertia	Wiring Diagram	Drawing	No. of Phase	Step Angle
		g.cm	A	ohm	g.cm	$g.cm^2$	Wdg	Fig		
PPMS49L48	PPMS49L48-01	1700	0.91	5.5	1700	14.5	a	1	2	7.5

Mechanical Dimension

Fig 1

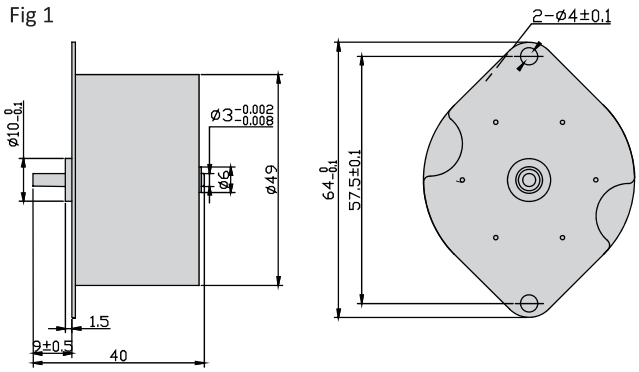

Wiring Diagram

Wdg a

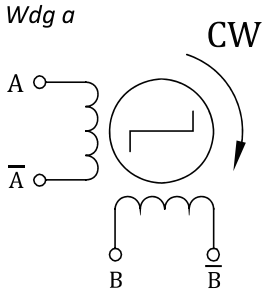

PPMS57 Series

Key Features

- Small Size
- Smooth Movement
- Low Inertia

Step Angle Accuracy	±8%
Resistance Accuracy	±10%
Inductance Accuracy	±20%
Ambient Temperature	-10°C ~ 50°C
Insulation Resistance	100 MΩ Min.(At 500VDC)
Dielectric Strength	RMS for 2 Sec(At 650±50VAC)
Insulation Class	Class E

Specifications

Series	Model Number	Holding Torque	Rated Current	Resistance per phase	Detent Torque	Rotor Inertia	Wiring Diagram	Drawing	No. of Phase	Step Angle
		g.cm	A	ohm	g.cm	g.cm²	Wdg	Fig		
PPMS57L48	PPMS57L48-01	1500	0.6	21	425	12.5	b	1	4	7.5
	PPMS57L48-02	1200	0.625	9	425	12.5	a	2	2	7.5

Typical Outline

Fig 1

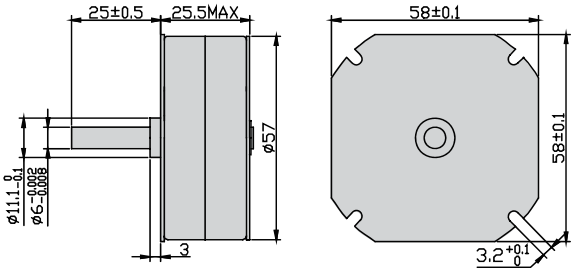

Fig 2

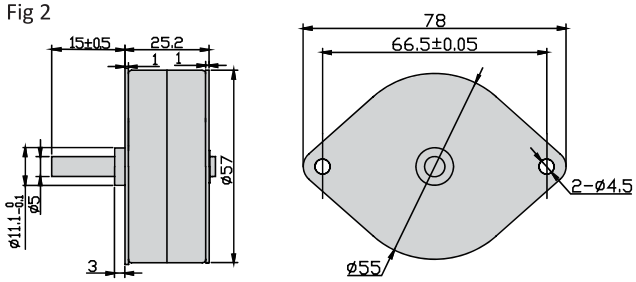

Wiring Diagram

Wdg a

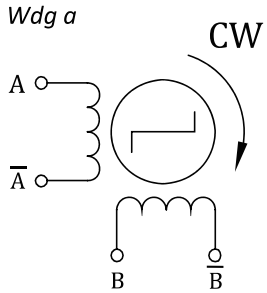

Wdg b

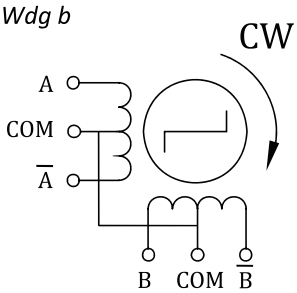

I

Can-Stack Stepper Linear Actuator

PPML Series

Description	129
Applications	129
Standard Versions	129
Part Number	129
Product Overview	130
Dia.20mm · PPML20 series	131-134
Dia.25mm · PPML25 series	135-138
Dia.36mm · PPML36 series	139-142

PPML Series

Description

PrimoPal provides three sizes,20 mm, 25 mm and 36 mm PM stepper linear actuators. For each size, three types of linear structures are available,non-captive, external and captive. Step travel varies from 0.00625 to 0.3333 mm/step and the maximum linear force can reach 115 N.

Applications

PrimoPal's PPML Series PM stepper linear actuators are widely used in much of today's sophisticated medical equipment, laboratory instrumentation, machinery automation, analytical equipment, and other applications that require precision motion.

Standard Versions

Frame Size			
Dia.20mm	External	Non-captive	Captive
Dia.25mm	External	Non-captive	Captive
Dia.36mm	External	Non-captive	Captive

Part Number

PPML □□ □ □□ – □ □ □□ – □ □□□

PrimoPal PM Linear Actuator

Movement Type
E: External
N: Non-captive
C: Captive

No. of Lead Wires
4: 4 Pins
6: 6 Pins
……

Electric Specs
Variety of current, resistance, etc

Lead Screw Specs
Variety of dia., length, etc

Frame Size
20: Ø20mm
25: Ø25mm
……

Body Length
30:30mm
40:40mm
……

Step Angle
S: 7.5°
T: 15°

Lead Screw Code
Refer to the table of lead screw code

PPML Series

Product Overview

Over view

Motor Size (mm)	Screw Diameter (mm)	Screw Lead (mm)	Travel per step		Max Thrust (N)	Power Consumption (w)	Screw Lead Code
			7.5°	15°			
Ø20	Ø3.5	0.6096	0.0127	0.0254	35	3.4	AA
		1.2192	0.0254	0.0508			B
		2.4384	0.0508	0.1016			J
Ø25	Ø3.5	0.6096	0.0127	0.0254	65	3.9	AA
		1.2192	0.0254	0.0508			B
		2.4384	0.0508	0.1016			J
Ø36	Ø6.35	0.6096	0.0127	0.0254	115	5.6	AA
		1.2192	0.0254	0.0508			B
		2.4384	0.0508	0.1016			J

PPML20 Series

Ambient Temperature	-10 °C ~ +50 °C
Dielectric Strength	500 VAC for one minute
Insulation Resistance	Class B

Motor Specs

Model	Voltage	Current	Resistance	Inductance	Lead Wire	Motor Length	
	V/Ø	mA/Ø	Ω/Ø	mH/Ø	Pin	inch	mm
PPML20□16-4S05	5	380	13	8.5	4	0.6299	16
PPML20□16-4S12	12	160	74.5	45	4	0.6299	16
PPML20□16-4T05	5	380	13	6	4	0.6299	16
PPML20□16-4T12	12	145	83.5	40	4	0.6299	16

e: Non-captive type (N), External type (E) or Captive type (C) is available, and please specify it with the blank box when ordering.

Travel Per Step And Lead Screw Code

Step Angle	Lead Code	Screw Dia.		Screw Lead		Travel/Step	
		inch	mm	inch	mm	inch	mm
7.5°	AA	0.138	3.5052	0.024	0.6096	0.0005	0.0127
	B	0.138	3.5052	0.048	1.2192	0.0010	0.0254
	J	0.138	3.5052	0.096	2.4384	0.0020	0.0508
15°	AA	0.138	3.5052	0.024	0.6096	0.0010	0.0254
	B	0.138	3.5052	0.048	1.2192	0.0020	0.0508
	J	0.138	3.5052	0.096	2.4384	0.0040	0.1016

PPML20 Series

Dimensional Drawings

External

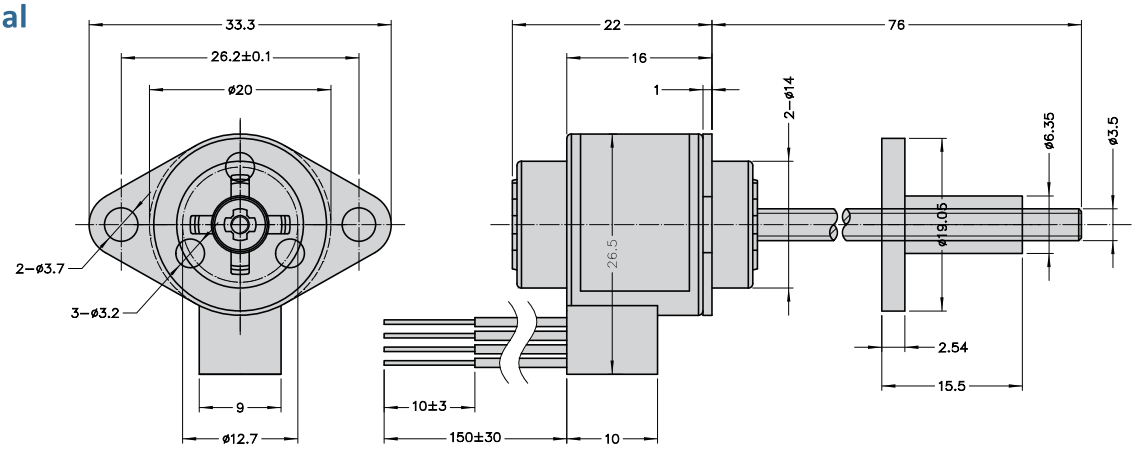

Non-captive

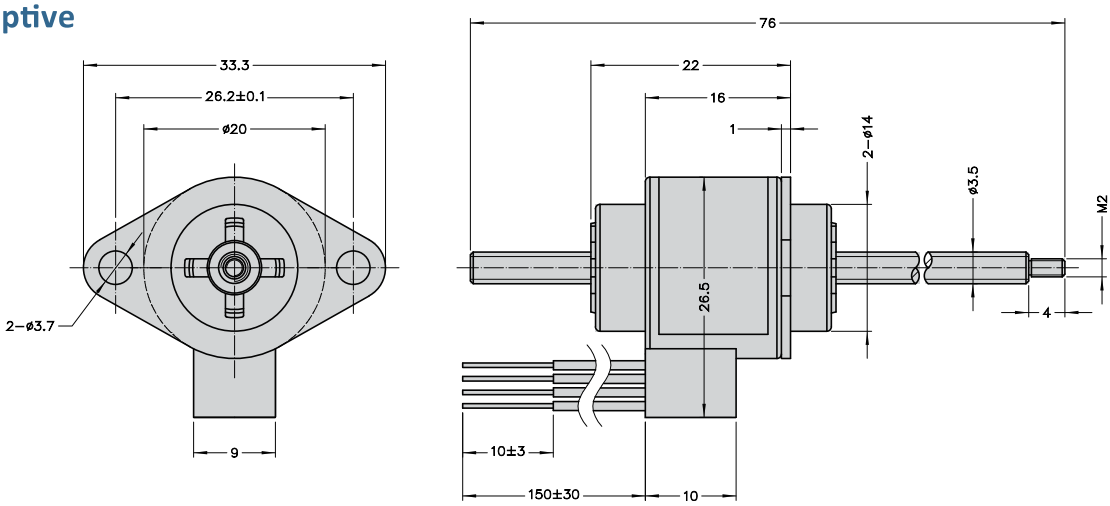

Captive

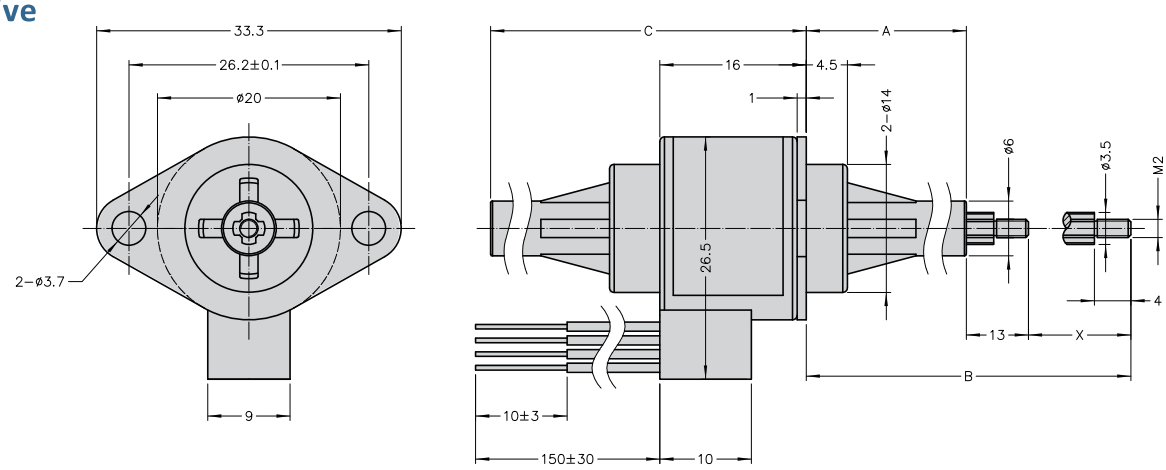

Stroke X(mm)	Front extension A	Total extension B	Body length C(MAX)
14	13.5±0.25	40.5±0.25	30.5
18	17.5±0.25	48.5±0.25	34.5
25	24.5±0.25	62.5±0.25	41.5
31	30.5±0.25	74.5±0.25	47.5

PPML20 Series

Linear Performance Curves

20 mm bi-polar,5V/7.5° under 24 VDC chopper drive

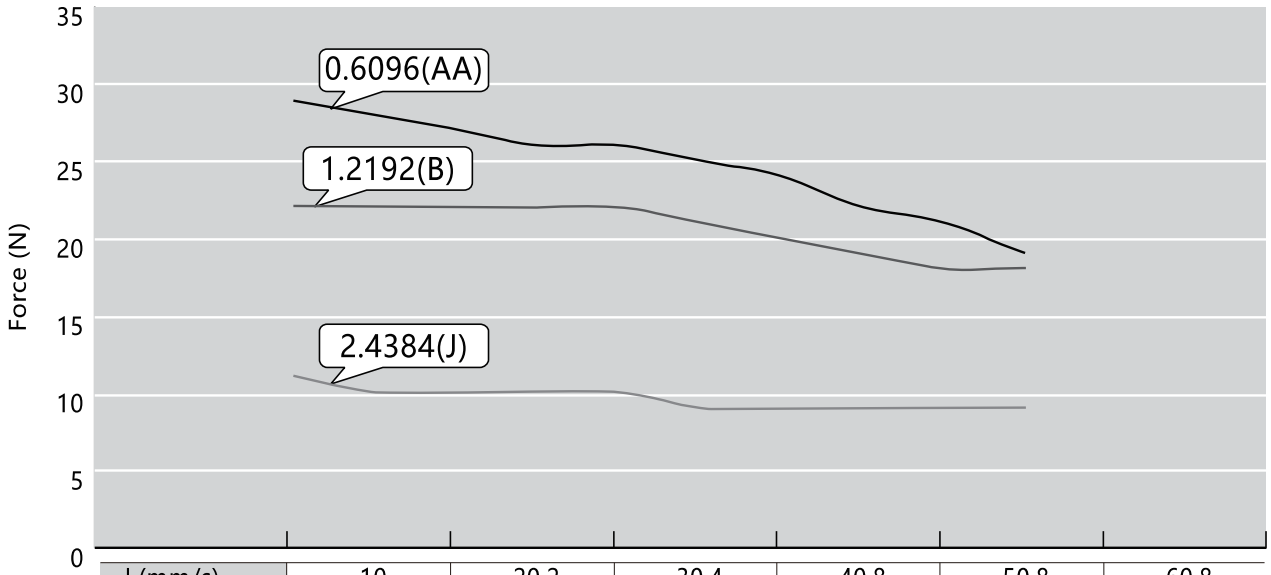

J (mm/s)	10	20.2	30.4	40.8	50.8	60.8
B (mm/s)	5	10.2	15.2	20.4	25.4	30.4
AA (mm/s)	2.5	5.1	7.6	10.2	12.7	15.2
RPM r/Min	250	500	750	1000	1250	1500
PPS	200	400	600	800	1000	1200

20 mm bi-polar,12V/7.5° under 24 VDC chopper drive

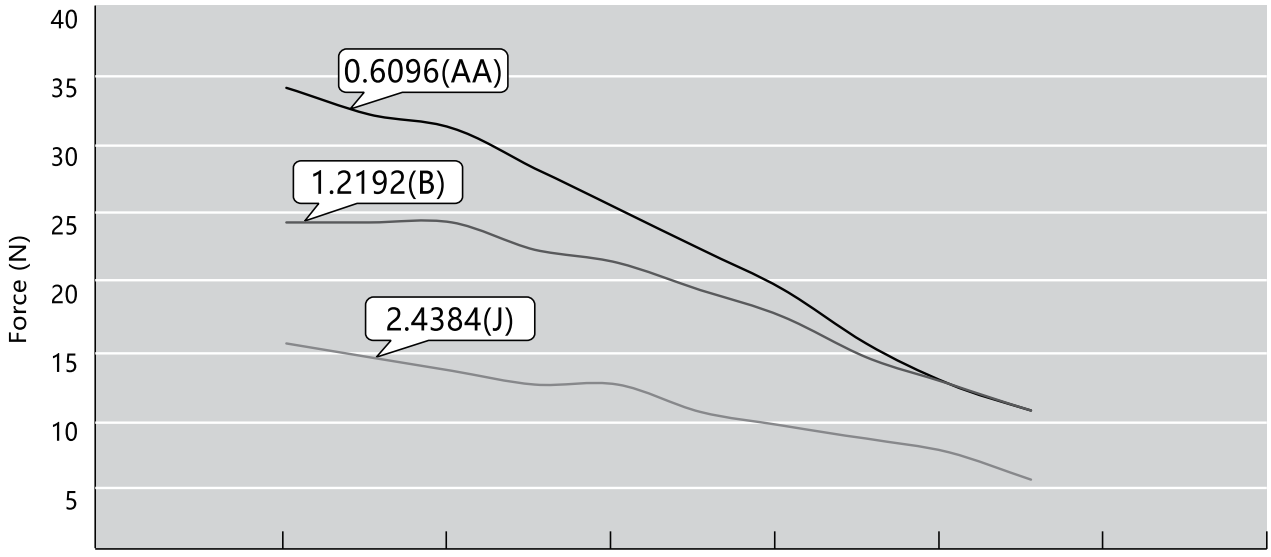

J (mm/s)	10	20.2	30.4	40.8	50.8	60.8
B (mm/s)	5	10.2	15.2	20.4	25.4	30.4
AA (mm/s)	2.5	5.1	7.6	10.2	12.7	15.2
RPM r/Min	250	500	750	1000	1250	1500
PPS	200	400	600	800	1000	1200

PPML20 Series

2Phase Hybrid Stepper Motor
3Phase Hybrid Stepper Motor
5Phase Hybrid Stepper Motor
Hybrid Stepper Gear Motor
Lead Screw Linear Actuator
Ball Screw Linear Actuator
IP65 Stepper Motor
Hollow Shaft Stepper Motor
Stepper Motor With Brake
Pancake Stepper Motor
PM Stepper Motor
Can-Stack Stepper Linear Actuator
PM Stepper Gear Motor
Stepper Motor Drive

20 mm bi-polar,5V/15° under 24 VDC chopper drive

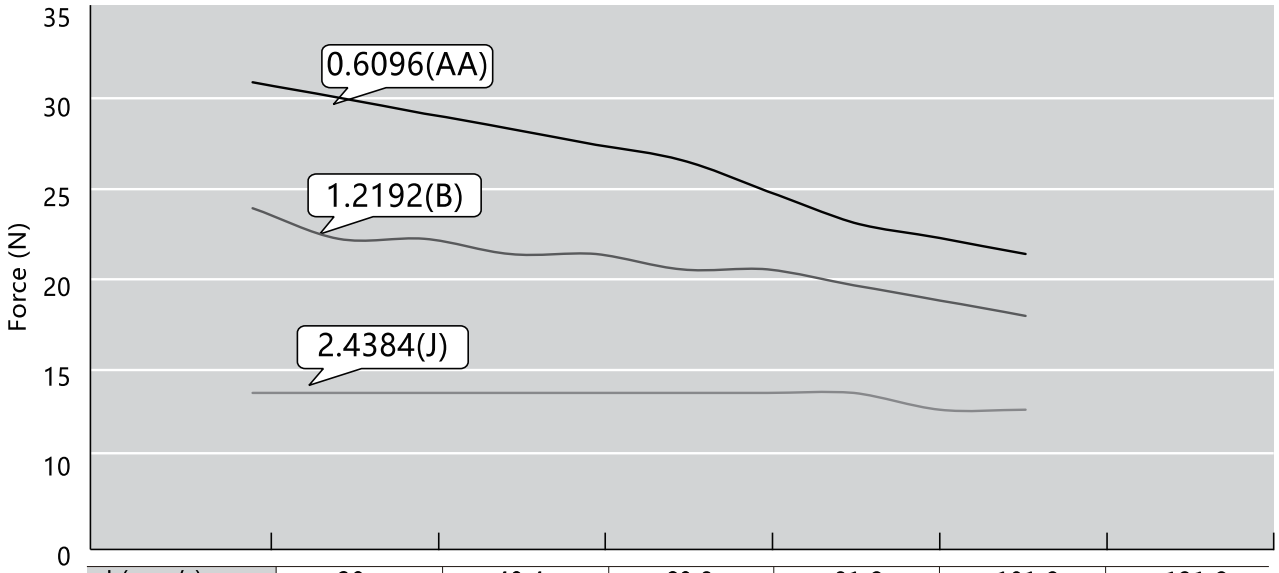

J (mm/s)	20	40.4	60.8	81.6	101.6	121.6
B (mm/s)	10	20.2	30.4	40.8	50.8	60.8
AA (mm/s)	5	10.2	15.2	20.4	25.4	30.4
RPM r/Min	500	1000	1500	2000	2500	3000
PPS	200	400	600	800	1000	1200

20 mm bi-polar,12V/15° under 24 VDC chopper drive

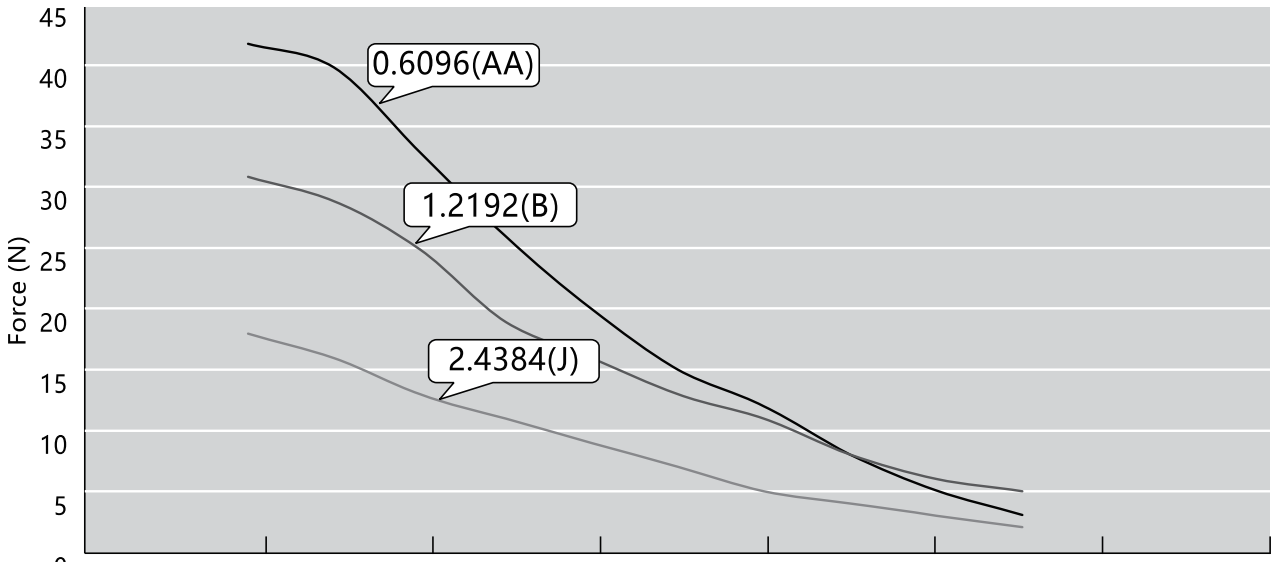

J (mm/s)	20	40.4	60.8	81.6	101.6	121.6
B (mm/s)	10	20.2	30.4	40.8	50.8	60.8
AA (mm/s)	5	10.2	15.2	20.4	25.4	30.4
RPM r/Min	500	1000	1500	2000	2500	3000
PPS	200	400	600	800	1000	1200

PPML25 Series

Ambient Temperature	-10 °C ~ +50 °C
Dielectric Strength	500 VAC for one minute
Insulation Resistance	Class B

Motor Specs

Model	Voltage	Current	Resistance	Inductance	Lead Wire	Motor Length	
	V/Ø	mA/Ø	Ω/Ø	mH/Ø	Pin	inch	mm
PPML25□16-4S05	5	370	13.5	15	4	0.6299	16
PPML25□16-4S12	12	160	70	75	4	0.6299	16
PPML25□16-4T05	5	370	13.5	11	4	0.6299	16
PPML25□16-4T12	12	160	70	55	4	0.6299	16

Note: Non-captive type (N), External type (E) or Captive type (C) is available, and please specify it with the blank box when ordering.

Travel Per Step And Lead Screw Code

Step Angle	Lead Code	Screw Dia.		Screw Lead		Travel/Step	
		inch	mm	inch	mm	inch	mm
7.5°	AA	0.138	3.5052	0.024	0.6096	0.0005	0.0127
	B	0.138	3.5052	0.048	1.2192	0.0010	0.0254
	J	0.138	3.5052	0.096	2.4384	0.0020	0.0508
15°	AA	0.138	3.5052	0.024	0.6096	0.0010	0.0254
	B	0.138	3.5052	0.048	1.2192	0.0020	0.0508
	J	0.138	3.5052	0.096	2.4384	0.0040	0.1016

PPML25 Series

Typical Dimension

External

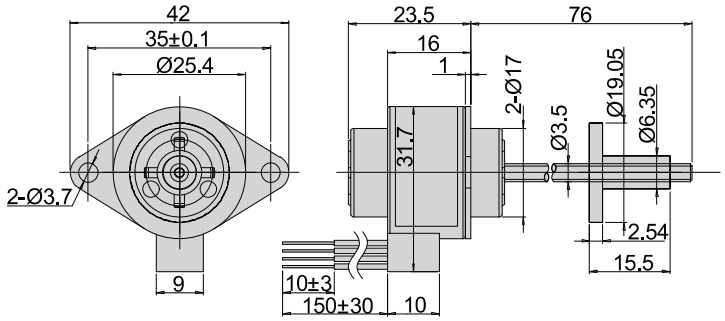

Non-captive

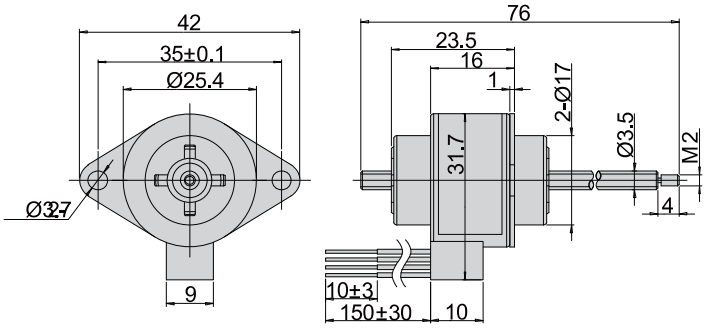

Captive

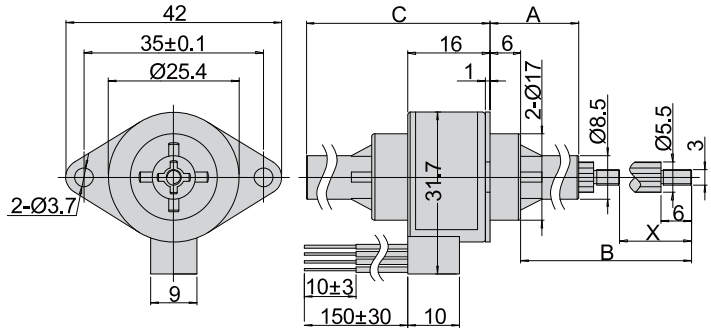

Stroke X	Front extension A	Rear extension B	Body length C (MAX)
13	10.5±0.25	36.5±0.25	29.5
18	15.5±0.25	46.5±0.25	34.5
25	22.5±0.25	60.5±0.25	41.5
31	28.5±0.25	72.5±0.25	47.5

PPML25 Series

Linear Performance Curves

25 mm bi-polar,5V/7.5° under 24 VDC chopper drive

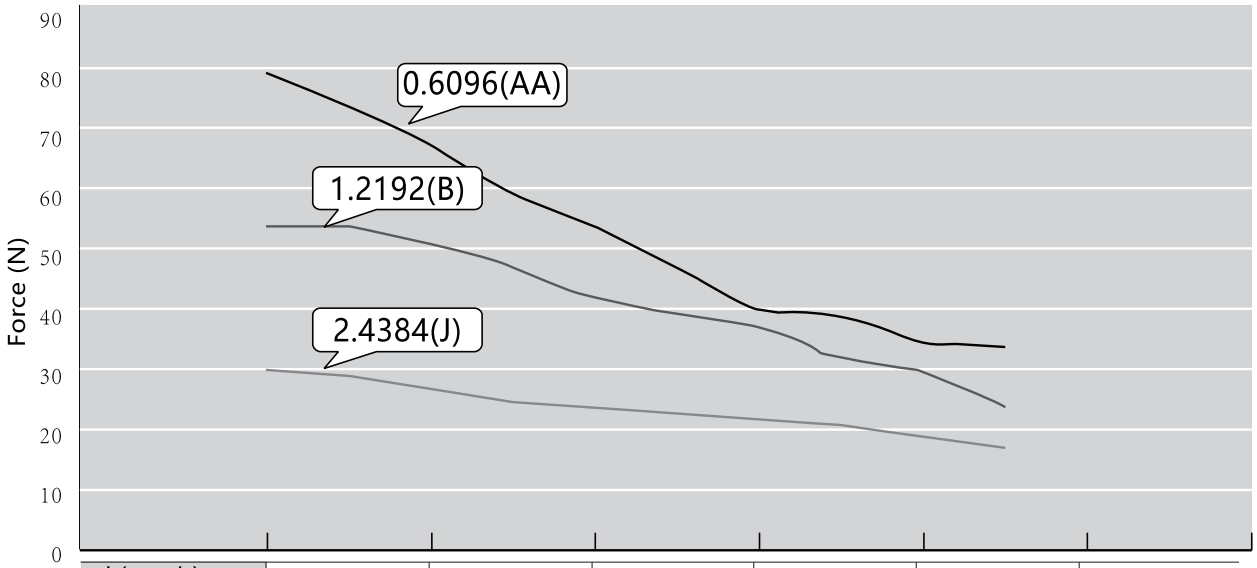

J (mm/s)	10	20.2	30.4	40.8	50.8	60.8
B (mm/s)	5	10.2	15.2	20.4	25.4	30.4
AA (mm/s)	2.5	5.1	7.6	10.2	12.7	15.2
RPM r/Min	250	500	750	1000	1250	1500
PPS	200	400	600	800	1000	1200

25 mm bi-polar,12V/7.5° under 24 VDC chopper drive

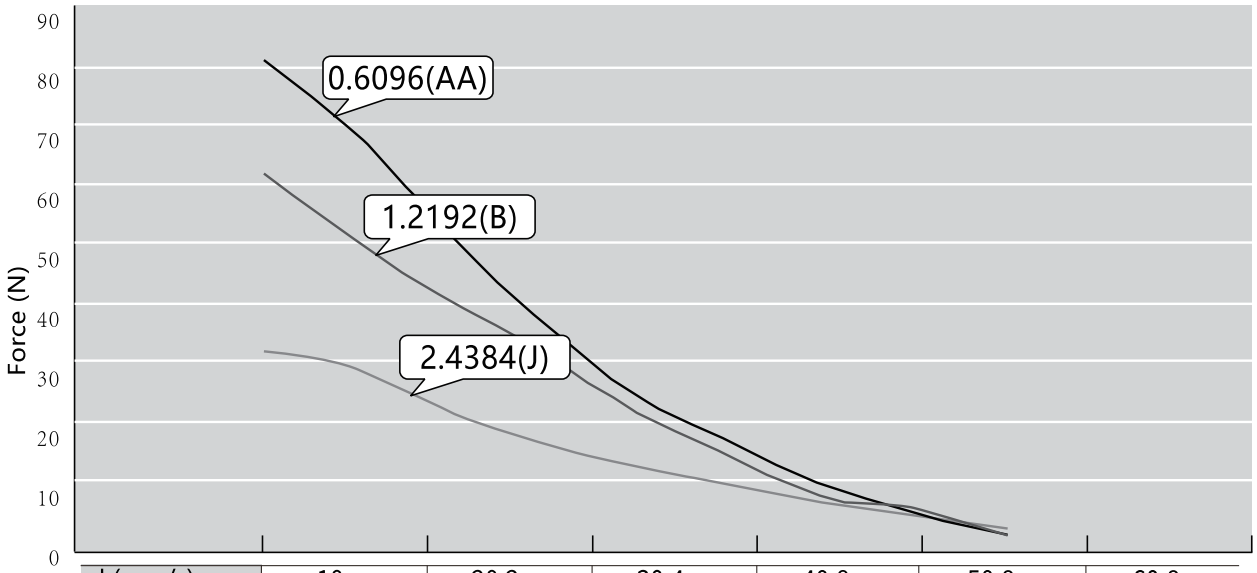

J (mm/s)	10	20.2	30.4	40.8	50.8	60.8
B (mm/s)	5	10.2	15.2	20.4	25.4	30.4
AA (mm/s)	2.5	5.1	7.6	10.2	12.7	15.2
RPM r/Min	250	500	750	1000	1250	1500
PPS	200	400	600	800	1000	1200

PPML25 Series

25 mm bi-polar,5V/15° under 24 VDC chopper drive

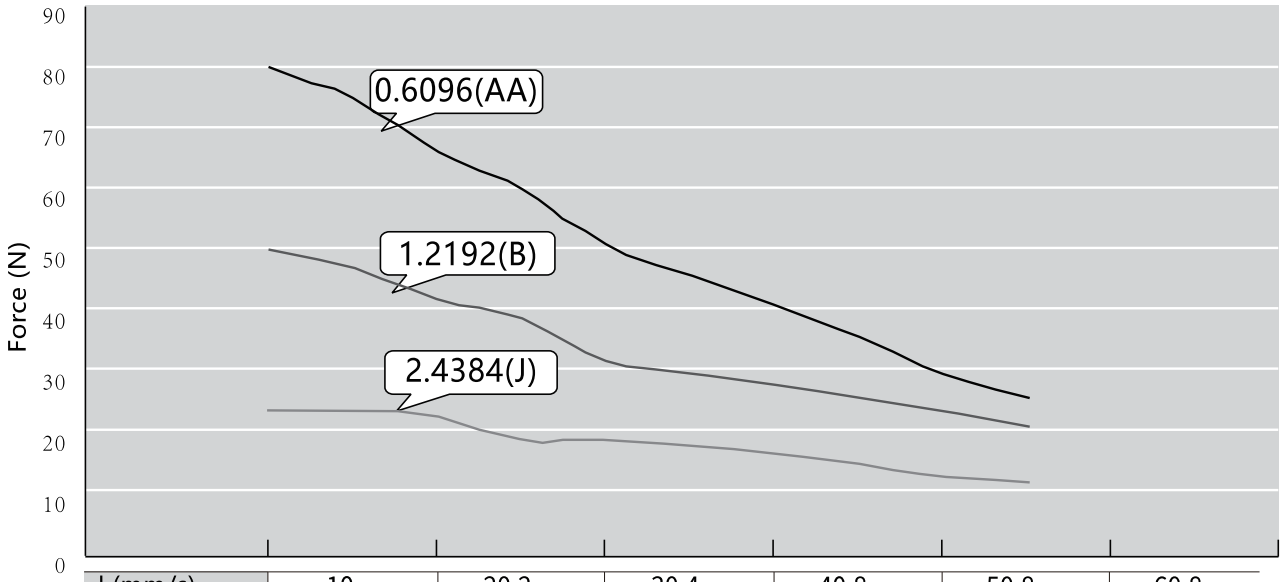

J (mm/s)	10	20.2	30.4	40.8	50.8	60.8
B (mm/s)	5	10.2	15.2	20.4	25.4	30.4
AA (mm/s)	2.5	5.1	7.6	10.2	12.7	15.2
RPM r/Min	250	500	750	1000	1250	1500
PPS	200	400	600	800	1000	1200

25 mm bi-polar,12V/15° under 24 VDC chopper drive

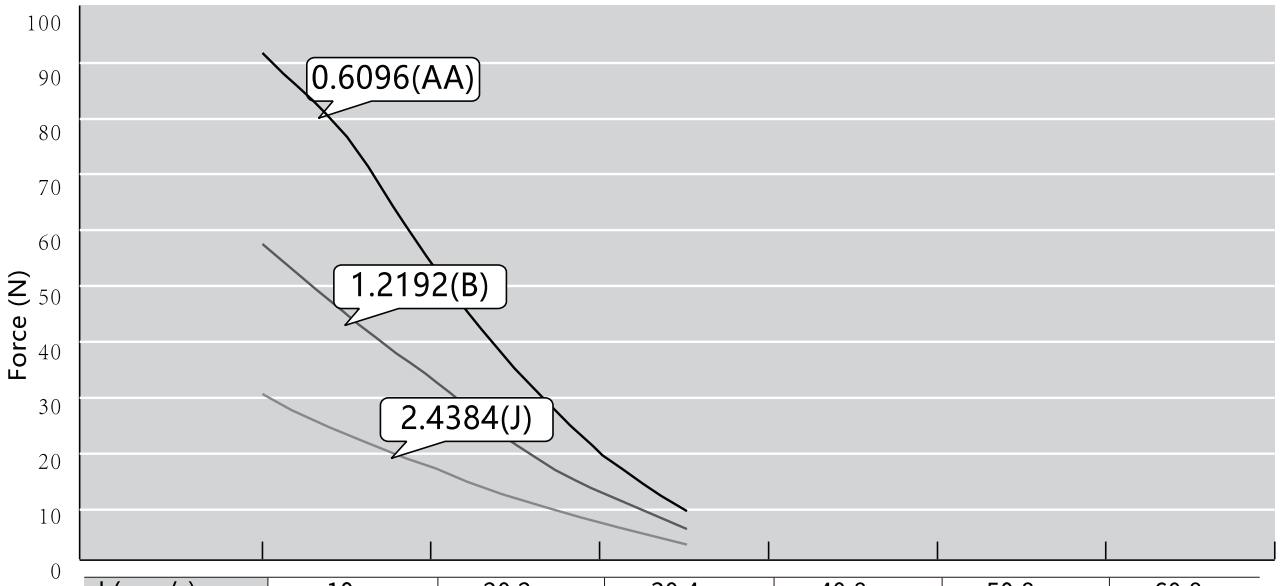

J (mm/s)	10	20.2	30.4	40.8	50.8	60.8
B (mm/s)	5	10.2	15.2	20.4	25.4	30.4
AA (mm/s)	2.5	5.1	7.6	10.2	12.7	15.2
RPM r/Min	250	500	750	1000	1250	1500
PPS	200	400	600	800	1000	1200

PPML36 Series

Ambient Temperature	-10 °C ~ +50 °C
Dielectric Strength	500 VAC for one minute
Insulation Resistance	Class B

Motor Specs

Model	Voltage	Current	Resistance	Inductance	Lead Wire	Motor Length	
	V/Ø	mA/Ø	Ω/Ø	mH/Ø	Pin	inch	mm
PPML36□19-4S05	5	560	9	13	4	0.7677	19.5
PPML36□19-4S12	12	230	52	85	4	0.7677	19.5
PPML36□19-4T05	5	560	9	9.5	4	0.7677	19.5
PPML36□19-4T12	12	230	52	62	4	0.7677	19.5

Note: Non-captive type (N), External type (E) or Captive type (C) is available, and please specify it with the blank box when ordering.

Travel Per Step And Lead Screw Code

Step Angle	Lead Code	Screw Dia.		Screw Lead		Travel/Step	
		inch	mm	inch	mm	inch	mm
7.5°	AA	0.25	6.35	0.024	0.6096	0.0005	0.0127
	B	0.25	6.35	0.048	1.2192	0.0010	0.0254
	J	0.25	6.35	0.096	2.4384	0.0020	0.0508
15°	AA	0.25	6.35	0.024	0.6096	0.0010	0.0254
	B	0.25	6.35	0.048	1.2192	0.0020	0.0508
	J	0.25	6.35	0.096	2.4384	0.0040	0.1016

PPML36 Series

Typical Dimension

External

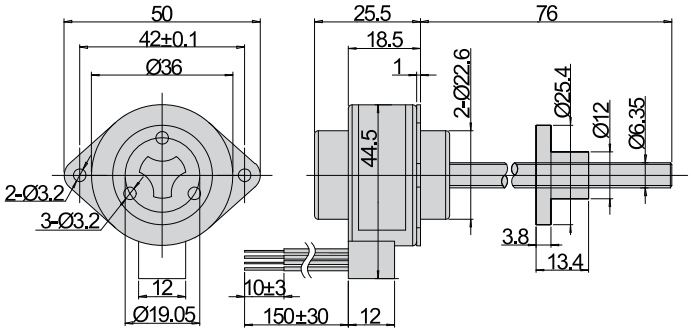

Non-captive

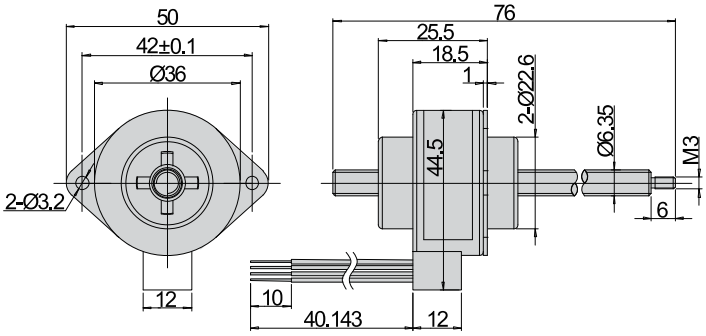

Captive

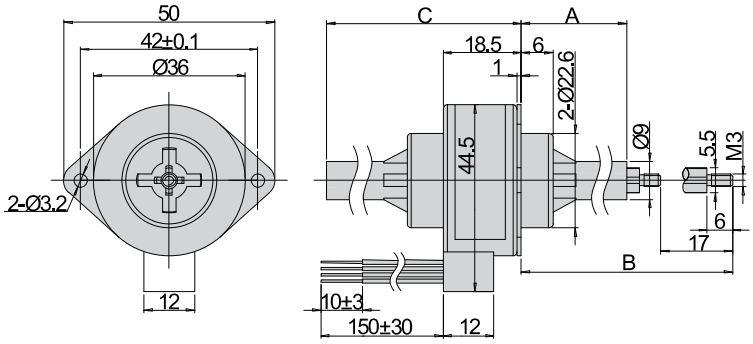

Stroke X	Front extension A	Rear extension B	Body length C (MAX)
16	12±0.25	41±0.25	31.5
25	22±0.25	53±0.25	40.5
38	34±0.25	89±0.25	53.5

PPML36 Series

Linear Performance Curves

36 mm bi-polar,5V/7.5° under 24 VDC chopper drive

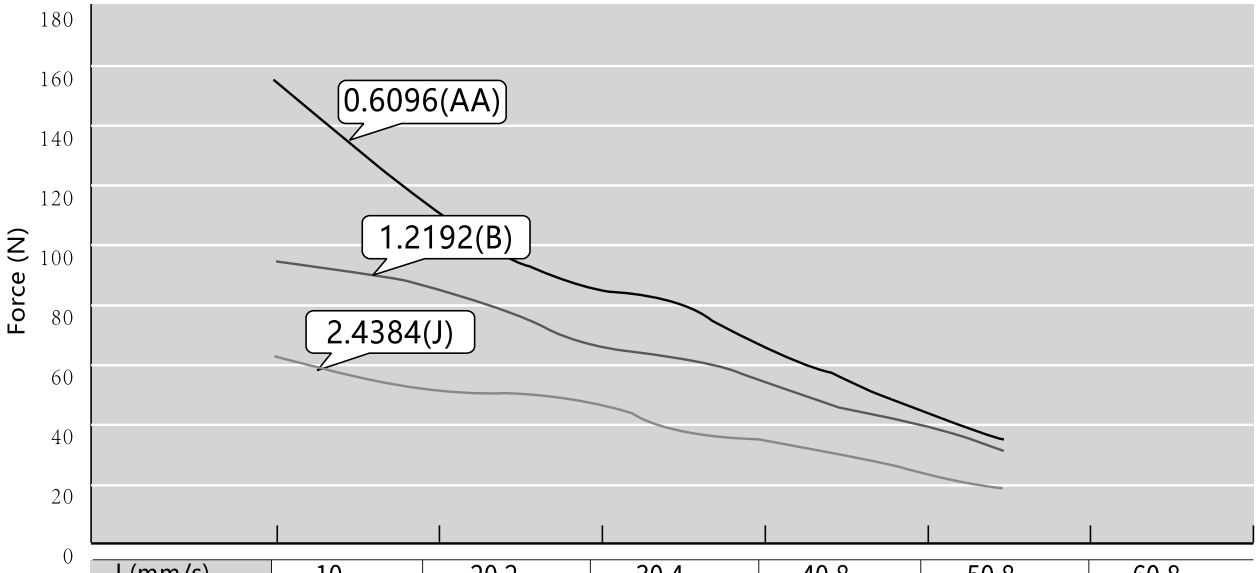

J (mm/s)	10	20.2	30.4	40.8	50.8	60.8
B (mm/s)	5	10.2	15.2	20.4	25.4	30.4
AA (mm/s)	2.5	5.1	7.6	10.2	12.7	15.2
RPM r/Min	250	500	750	1000	1250	1500
PPS	200	400	600	800	1000	1200

36 mm bi-polar,5V/15° under 24 VDC chopper drive

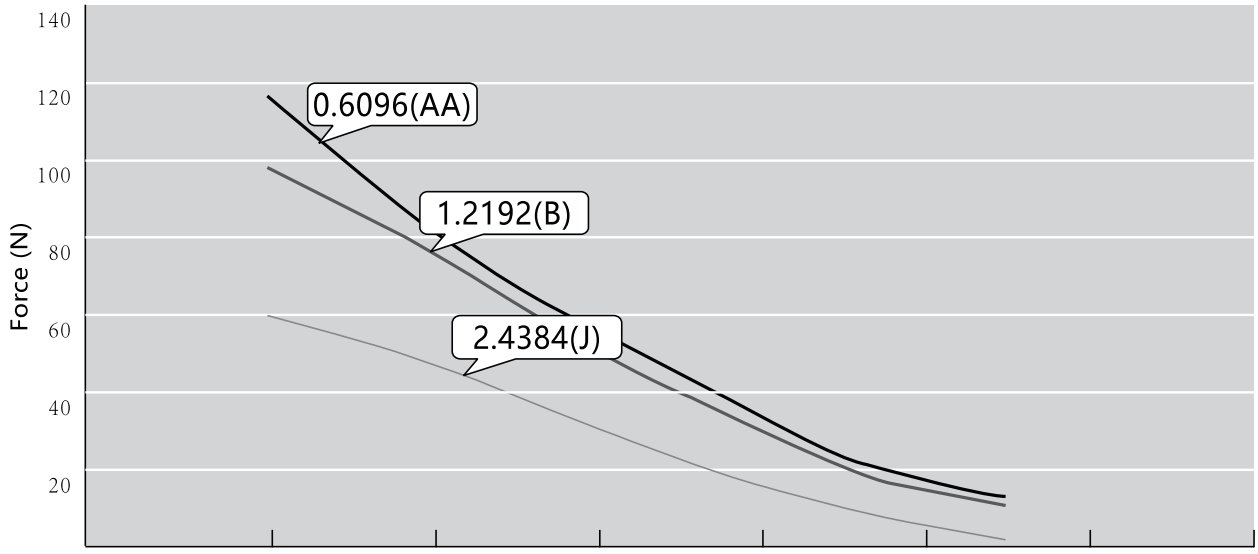

J (mm/s)	10	20.2	30.4	40.8	50.8	60.8
B (mm/s)	5	10.2	15.2	20.4	25.4	30.4
AA (mm/s)	2.5	5.1	7.6	10.2	12.7	15.2
RPM r/Min	250	500	750	1000	1250	1500
PPS	200	400	600	800	1000	1200

PPML36 Series

36 mm bi-polar,12V/7.5° under 24 VDC chopper drive

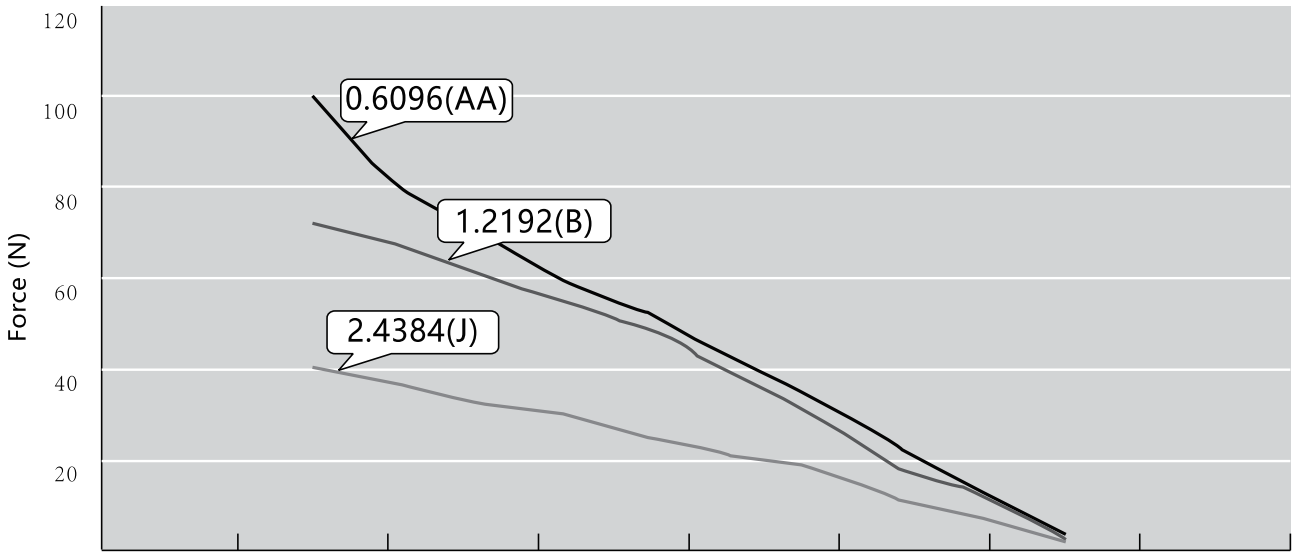

J (mm/s)	5	10	15.1	20.2	25.3	30.4	35.4
B (mm/s)	2.5	5	7.5	10.2	12.5	15.2	17.7
AA (mm/s)	1.25	2.5	3.8	5.1	6.3	7.6	8.9
RPM r/Min	125	250	375	500	625	750	875
PPS	100	200	300	400	500	600	700

36 mm bi-polar,12V/15° under 24 VDC chopper drive

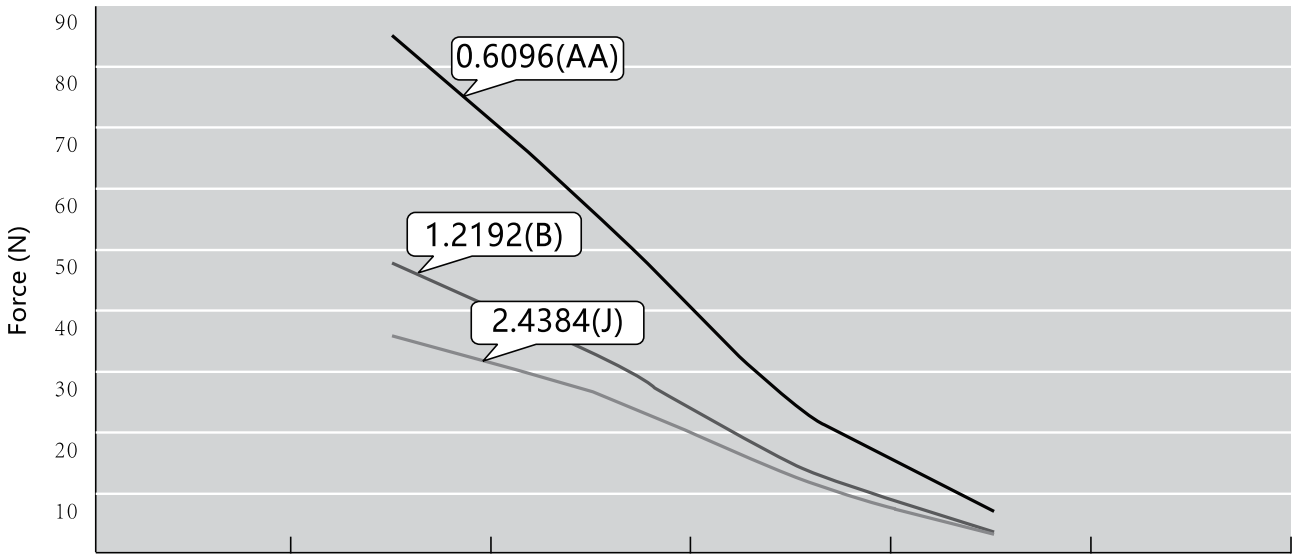

J (mm/s)	10	20	20.2	40.4	50.8
B (mm/s)	5	10	15.1	20.2	25.4
AA (mm/s)	2.5	5	7.6	10.2	12.7
RPM r/Min	250	500	750	1000	1250
PPS	100	200	300	400	500

J

PM Stepper Gear Motor

PPMG Series

Description	144
Applications	144
Part Number	144
Standard Versions	144
PPMG24N Series	145
PPMG28N Series	146
PPMG35N Series	147
PPMG15P Series	148
PPMG25P Series	149-150
PPMG35P Series	151-152
PPMG42P Series	153-154

Description

PrimoPal's PPMG Series PM Stepper Gearmotor includes ordinary type (motor with gears inside) and precision type (motor with added gearhead). These motors offer a wide range of gear ratios in a compact size, along with high output and high resolution, especially the precision-type ones. They are low-cost solutions and can perfectly meet your needs of motion or automation control. Besides, custom motor winding and gearhead specs are also available.

Applications

PrimoPal's PPMG Series PM Stepper Gearmotors are widely used in kinds of applications, such as air-conditioners, printers, photocopiers, power tools and other industrial & office automation equipment.

Part Number

PPMG □□ □ □□ – □□ □□

PPMG — **PrimoPal PM Stepper Gearmotor**

□□ — **Base Frame** (O.D. in mm)

□ — **Motor Type**
N: Ordinary Type, With gears inside
P: Precision Type, With added gearbox

□□ — **Reduction Ratio**
05: 1:5
10: 1:10
30: 1:30
.....

□□ — **Electric Variation**
Variety ofvoltage, current, etc

□□ — **Mechanical Variation**
Varietyof shaft, leadwire,etc

PrimoPal's PM Stepper Gearmotors Summary

	PPMG24N Series Ordinary Type Frame Size: Ø24mm		PPMG28N Series Ordinary Type Frame Size: Ø28mm
	PPMG35N Series Ordinary Type Frame Size: Ø35mm		PPMG15P Series Precision Type Frame Size: Ø15mm
	PPMG25P Series Precision Type Frame Size: Ø25mm		PPMG35P Series Precision Type Frame Size: Ø35mm
	PPMG42P Series Precision Type Frame Size: Ø42mm		

PPMG24N Series

Key Features

- Small Size
- Smooth Movement
- Low Inertia

Step Angle Accuracy	±8%
Resistance Accuracy	±10%
Inductance Accuracy	±20%
Ambient Temperature	-10°C ~ 50°C
Insulation Resistance	100 MΩ Min.(At 500VDC)
Dielectric Strength	RMS for 2 Sec(At 650±50VAC)
Insulation Class	Class E

Specifications

Series	Model Number	Voltage	Rated Current	Resistance per phase	No-load Starting Freq	Detent Torque	Rotor Inertia	Wiring Diagram	Gear Ratio	No. of Phase	Step Angle
		V/Ø	A	ohm	pps	g.cm/pps	g.cm	Wdg			
PPMG24N64	PPMG24N64-07	5	0.071	70	500	150/100	200	a	1:64	4	5.625/64
	PPMG24N64-10	12	0.1	120	500	500/100	200	a	1:64	4	5.625/64
	PPMG24N64-04	12	0.04	300	500	300/100	200	a	1:64	4	5.625/64
PPMG24N25	PPMG24N25-06	12	0.06	200	500	150/100	80	a	1:25	4	5.625/25
PPMG24N16	PPMG24N16-06	12	0.06	200	500	100/100	50	a	1:16	4	5.625/16

Typical Outline

Fig 1

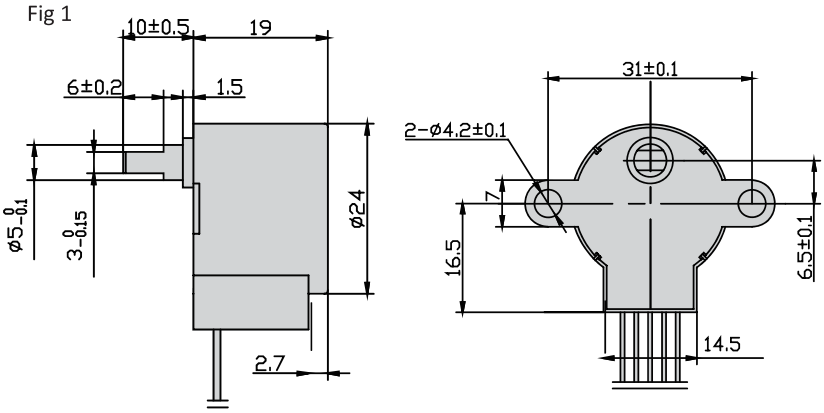

Wiring Diagram

Wdg a

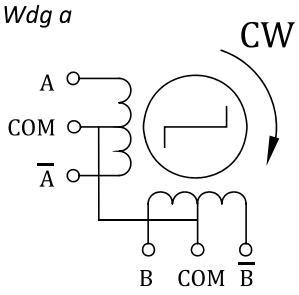

PPMG28N Series

Key Features

- Low Noise
- Low Inertia
- High Acceleration

Step Angle Accuracy	±8%
Resistance Accuracy	±10%
Inductance Accuracy	±20%
Ambient Temperature	-10°C ~ 50°C
Insulation Resistance	100 MΩ Min.(At 500VDC)
Dielectric Strength	RMS for 2 Sec(At 650±50VAC)
Insulation Class	Class E

Specifications

Series	Model Number	Voltage	Rated Current	Resistance per phase	No-load Starting Freq	Detent Torque	Rotor Inertia	Wiring Diagram	Gear Ratio	No. of Phase	Step Angle
		V/Ø	A	ohm	pps	g.cm/pps	g.cm	Wdg			
PPMG28N64	PPMG28N64-10	12	0.1	120	500	500/100	200	a	1:64	4	5.625/64
	PPMG28N64-06	12	0.06	200	500	400/100	200	a	1:64	4	5.625/64
	PPMG28N64-04	12	0.04	300	500	300/100	200	a	1:64	4	5.625/64

Typical Outline

Fig 1

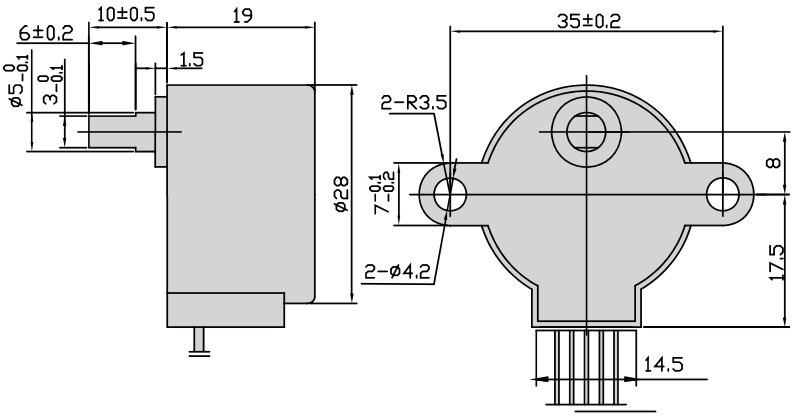

Wiring Diagram

Wdg a

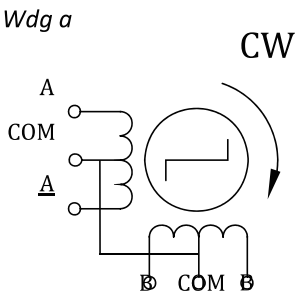

PPMG35N Series

Key Features

- Very High Torque
- Smooth Movement
- Low Speed

Step Angle Accuracy	±8%
Resistance Accuracy	±10%
Inductance Accuracy	±20%
Ambient Temperature	-10°C ~ 50°C
Insulation Resistance	100 MΩ Min.(At 500VDC)
Dielectric Strength	RMS for 2 Sec(At 650±50VAC)
Insulation Class	Class E

Specifications

- 8-Leadwire Motors

Series	Model Number	Voltage	Rated Current	Resistance per phase	No-load Starting Freq	Detent Torque	Rotor Inertia	Wiring Diagram	Gear Ratio	No. of Phase	Step Angle
		V/Ø	A	ohm	pps	g.cm/pps	g.cm	Wdg			
PPMG35N85	PPMG35N85-10	12	0.1	120	450	800/100	350	a	1:85.25	4	7.5/85.25
	PPMG35N85-06	12	0.06	200	450	600/100	350	a	1:85.25	4	7.5/85.25
	PPMG35N85-16	8	0.16	50	600	1500/100	800	b	1:85.25	2	7.5/85.25

Typical Outline

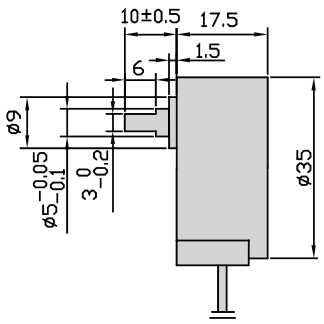

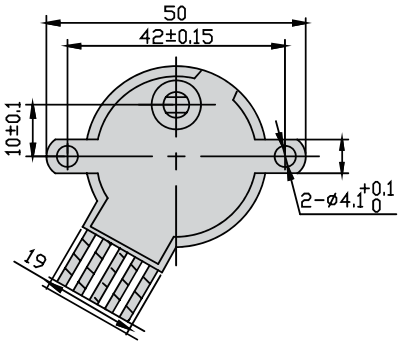

Wiring Diagram

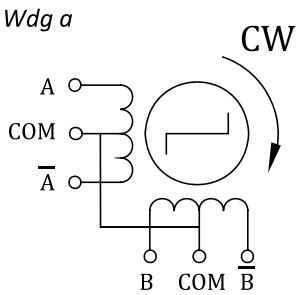

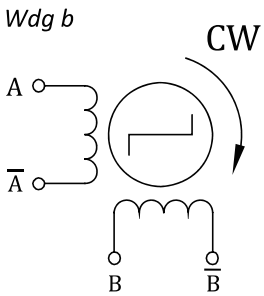

PPMG15P Series

Key Features

- High Torque
- High Accuracy
- Smooth Movement

Step Angle Accuracy	±8%
Resistance Accuracy	±10%
Inductance Accuracy	±20%
Ambient Temperature	-10°C ~ 50°C
Insulation Resistance	100 MΩ Min.(At 500VDC)
Dielectric Strength	RMS for 2 Sec(At 650±50VAC)
Insulation Class	Class E

Specifications

Series	Model Number	Voltage	Rated Current	Resistance per phase	No-load Starting Freq	Detent Torque	Rotor Inertia	Wiring Diagram	Gear Ratio	No. of Phase	Step Angle
		V/Ø	A	ohm	pps	g.cm/pps	g.cm	Wdg			
PPMG15P50	PPMG15P50-05	5	0.5	10	1280	800/100	1350	a	1:50	2	18/50
	PPMG15P102-05	5	0.5	10	1000	600/100	2000	a	1:102.5	2	18/102.5

Typical Outline

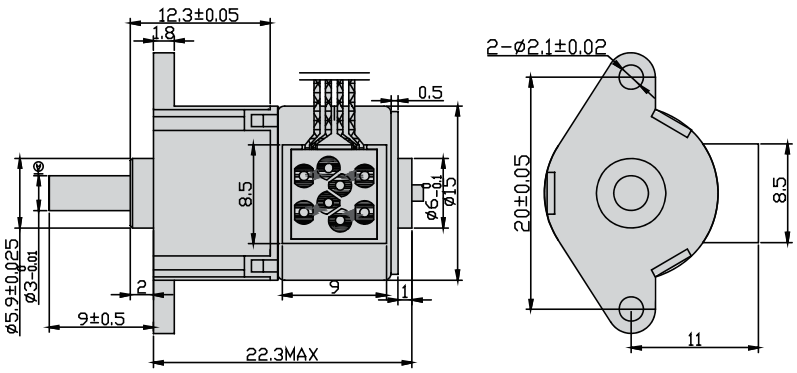

Wiring Diagram

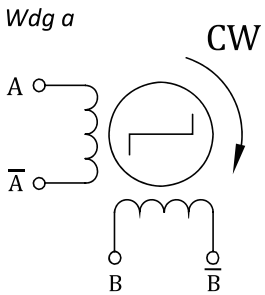

PPMG25P Series

Key Features

- Small Size
- Smooth Movement
- Low Inertia

Step Angle Accuracy	±8%
Resistance Accuracy	±10%
Inductance Accuracy	±20%
Ambient Temperature	-10°C ~ 50°C
Insulation Resistance	100 MΩ Min.(At 500VDC)
Dielectric Strength	RMS for 2 Sec(At 650±50VAC)
Insulation Class	Class E

Specifications

Series	Model Number	Voltage	Rated Current	Resistance per phase	No-load Starting Freq	Detent Torque	Rotor Inertia	Wiring Diagram	Gear Ratio	No. of Phase	Step Angle
		V/Ø	A	ohm	pps	g.cm/pps	g.cm	Wdg			
PPMG25P05	PPMG25P05-26	2.6	0.52	5	450	75/200	450	a	1:50	2	7.5/5
	PPMG25P05-35	3.5	0.36	9.6	420	100/200	500	a	1:102.5	2	7.5/5
PPMG25P60	PPMG25P60-14	13.5	0.105	128	720	1500/410	7700	a	1:102.5	4	7.5/60
PPMG25P20	PPMG25P20-12	12	0.08	150	600	500/100	1000	b	1:102.5	4	15/20
PPMG25P30	PPMG25P30-11	13.3	0.11	120	680	750/300	4000	b	1:102.5	4	7.5/30
PPMG25P10	PPMG25P10-50	5	0.5	10	720	400/100	1100	b	1:102.5	4	7.5/10
PPMG25P76	PPMG25P76-25	5	0.25	20	430	720/200	5000	b	1:102.5	4	15/76
PPMG25P60	PPMG25P60-12	12	0.12	100	650	2200/200	5000	a	1:102.5	2	7.5/60

Typical Outline

Fig 1

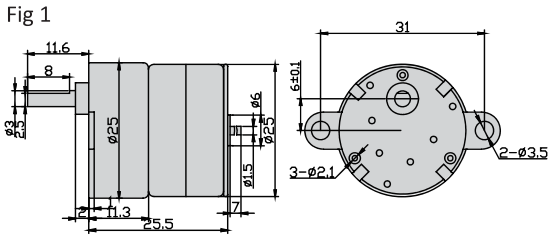

Fig 2

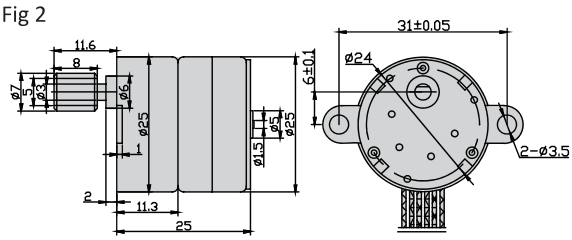

Fig 3

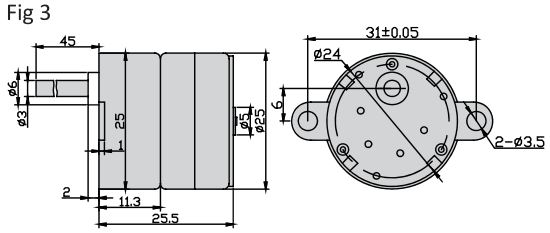

Fig 4

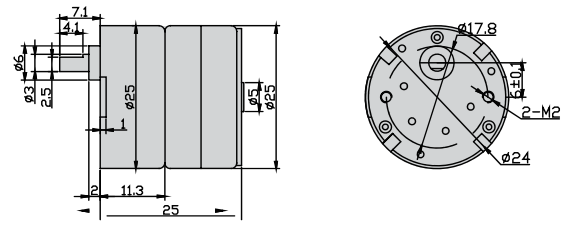

PPMG25P Series

Typical Outline

Fig 5

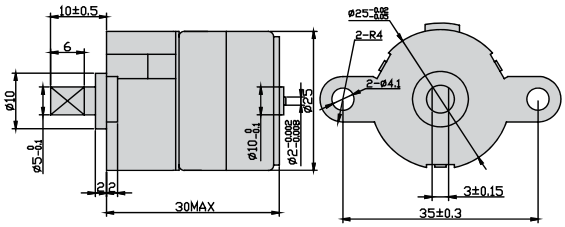

Fig 6

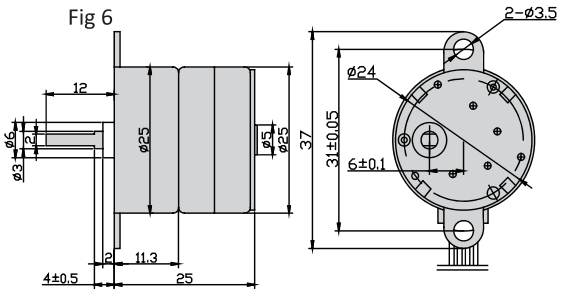

Wiring Diagram

Wdg a

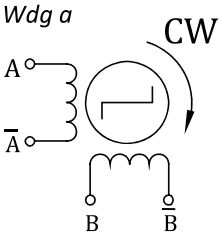

Wdg b

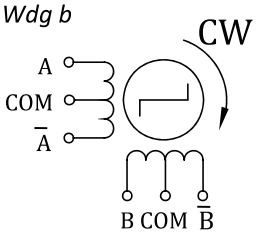

PPMG35P Series

Key Features

- Small Size
- Smooth Movement
- Low Inertia

Step Angle Accuracy	±8%
Resistance Accuracy	±10%
Inductance Accuracy	±20%
Ambient Temperature	-10°C ~ 50°C
Insulation Resistance	100 MΩ Min.(At 500VDC)
Dielectric Strength	RMS for 2 Sec(At 650±50VAC)
Insulation Class	Class E

Specifications

Series	Model Number	Voltage	Rated Current	Resistance per phase	No-load Starting Freq	Detent Torque	Rotor Inertia	Wiring Diagram	Gear Ratio	No. of Phase	Step Angle
		V/Ø	A	ohm	pps	g.cm/pps	g.cm	Wdg			
PPMG35P19	PPMG35P19-04	12	0.4	30	360	2500/200	10000	a	1:19	4	7.5/19
	PPMG35P19-13	24	0.13	185	430	1300/200	4000	a	1:19	4	7.5/19
PPMG35P08	PPMG35P08-04	12	0.4	30	360	800/300	2000	a	1:8.4	4	7.5/8.4
PPMG35P30	PPMG35P30-04	12	0.4	30	360	2500/300	12000	a	1:30	4	7.5/30
PPMG35P60	PPMG35P60-04	12	0.4	30	360	3000/300	10000	a	1:60	4	7.5/60
PPMG35P120	PPMG35P120-04	12	0.4	30	360	8000/300	10000	a	1:120	4	7.5/120
PPMG35P16	PPMG35P16-23	12	0.23	52.5	470	1300/200	5000	a	1:16	4	7.5/16

Typical Outline

Fig 1

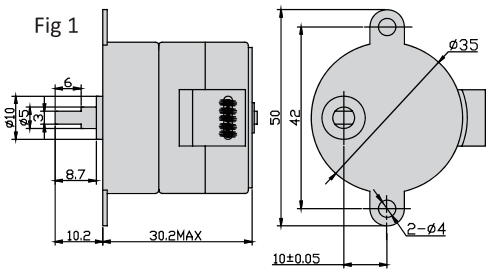

Fig 2

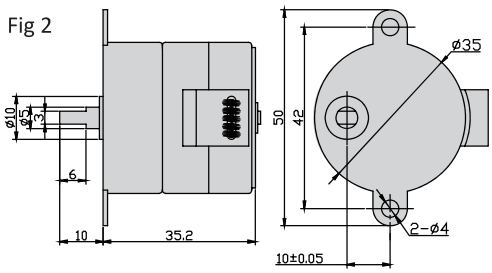

PPMG35P Series

Typical Outline

Fig 3

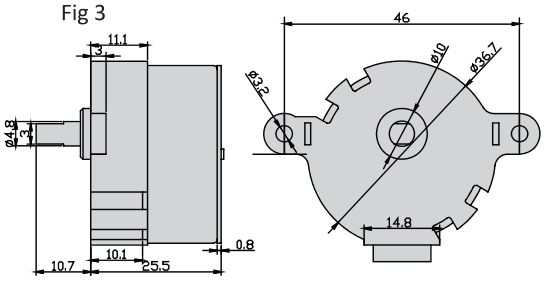

Fig 4

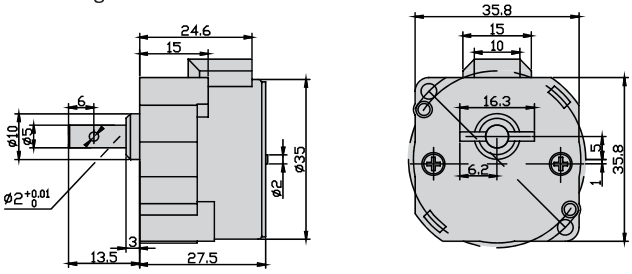

Wiring Diagram

Wdg a

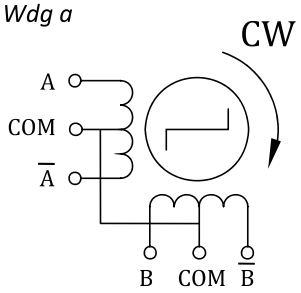

2Phase Hybrid Stepper Motor
3Phase Hybrid Stepper Motor
5Phase Hybrid Stepper Motor
Hybrid Stepper Gear Motor
Lead Screw Linear Actuator
Ball Screw Linear Actuator
IP65 Stepper Motor
Hollow Shaft Stepper Motor
Stepper Motor With Brake
Pancake Stepper Motor
PM Stepper Motor
Can-Stack Stepper Linear Actuator
PM Stepper Gear Motor
Stepper Motor Drive

PPMG42P Series

Key Features

- Small Size
- Smooth Movement
- Low Inertia

Step Angle Accuracy	±8%
Resistance Accuracy	±10%
Inductance Accuracy	±20%
Ambient Temperature	-10°C ~ 50°C
Insulation Resistance	100 MΩ Min.(At 500VDC)
Dielectric Strength	RMS for 2 Sec(At 650±50VAC)
Insulation Class	Class E

Specifications

Series	Model Number	Voltage	Rated Current	Resistance per phase	No-load Starting Freq	Detent Torque	Rotor Inertia	Wiring Diagram	Gear Ratio	No. of Phase	Step Angle
		V/Ø	A	ohm	pps	g.cm/pps	g.cm	Wdg			
PPMG42P24	PPMG42P24-27	12	0.445	27	380	1600/200	113000	b	1:24	4	7.5/24
	PPMG42P24-54	12	0.222	54	280	1200/200	10000	a	1:24	2	7.5/24
PPMG42P25	PPMG42P25-08	24	0.08	300	260	1000/100	10000	b	1:25	4	7.5/25
PPMG42P30	PPMG42P30-66	12	0.182	66	240	1700/100	5000	c	1:30	4	15/30

Typical Outline

Fig 1

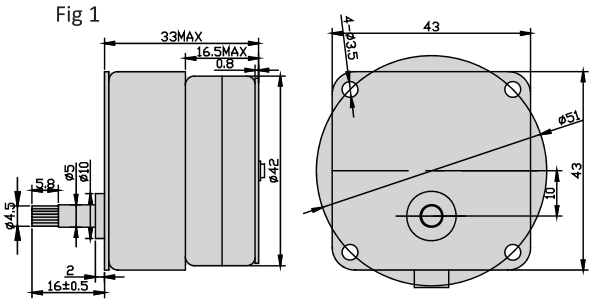

Fig 2

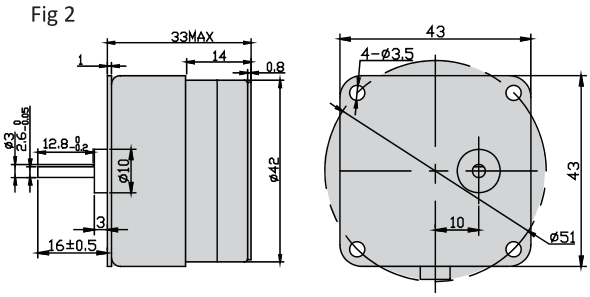

Fig 3

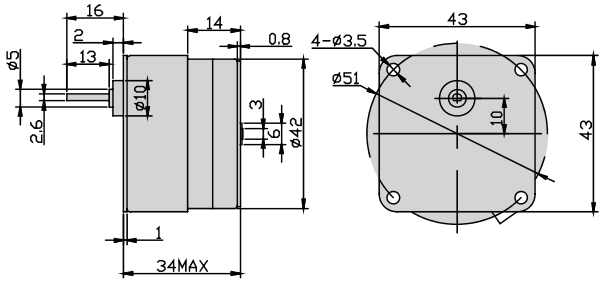

Fig 4

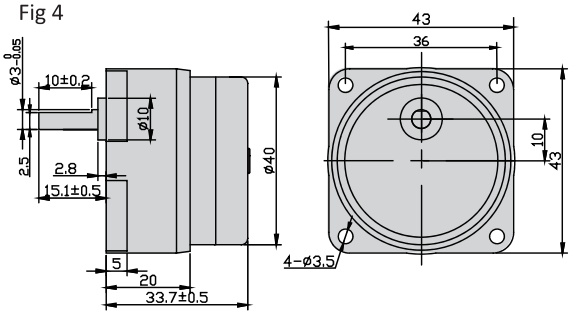

PPMG42P Series

Wiring Diagram

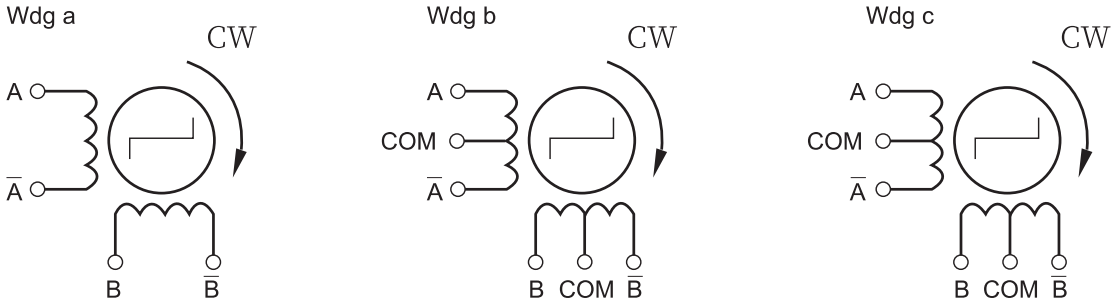

2Phase Hybrid Stepper Motor
3Phase Hybrid Stepper Motor
5Phase Hybrid Stepper Motor
Hybrid Stepper Gear Motor
Lead Screw Linear Actuator
Ball Screw Linear Actuator
IP65 Stepper Motor
Hollow Shaft Stepper Motor
Stepper Motor With Brake
Pancake Stepper Motor
PM Stepper Motor
Can-Stack Stepper Linear Actuator
PM Stepper Gear Motor
Stepper Motor Drive

K

Stepper Motor Drive

Description	156
Applications	156
Part Number	156
Standard Versions	156
Description	157
Control Signal Connections	157
Typical Connections	157

Economy Type

PST4030	158
PST4042	159
PST5042	160
PST5056	161
PST8056	162
PST8072	163
PST8060AC	164
P3ST8082	165

High Performance Type

PSR5030	166
PSR5055	167
PSR8098	168

Description

PrimoPal provides two types of stepper drives, including PST series and PSR series, The PST series of digital stepper drives are based on powerful 32-bit DSP control technology. Their features include super-low stepping noise, anti-resonance, low-speed ripple smoothing, and low motor heating. The PSR series of analog stepper drives adopt precise analog current control and are characterized by superior high-speed torque, relatively low stepping noise and low motor heating.
Their features include super-low stepping noise, anti-resonance, low-speed ripple smoothing and low motor heating.

Applications

PrimoPal's PST/PSR series stepper drives are suitable for driving a wide range of stepper motors, from frame size NEMA 8 to NEMA 42. Typical applications include CNC routers, laser cutters, laser markers, medical equipment, X-Y tables, measurement equipment, 3D printers, and many other industrial and office automation applications.

Part Number

P	□	□	□□	□□	□□
PrimoPal	**No. of Phase** Blank: 2-phase 3: 3-phase 5: 5-phase s	**Driver Type** ST: ST Series SR: SR Series	**Max. Input Voltage** 30: 30VDC 40: 40VDC …… Microstep	**Max. Output Current** 15: 1.5A 42: 4.2A …… Microstep	**Voltage Type** Blank: DC Power AC: AC power

Standard Versions

Model	Phase	Output Current	Operating Voltage		Microstep Resolutions	Driving Motors	Size	Weight
		A	AC	DC		NEMA	mm	Kg
▪ PST Series:								
PST4030	2	0.1-3.0	N/A	12-32	1-512	8-17	92.6×56×21	0.09
PST4042	2	0.5-4.2	N/A	18-40	1-512	8-23	116×69×26.5	0.20
PST5042	2	0.5-4.2	N/A	20-50	1-128, 5-125	17-24	118×75.5×34	0.28
PST5056	2	0.5-5.6	N/A	18-50	1-512	17-24	118×75.5×34	0.28
PST8056	2	0.5-5.6	N/A	24-80	1-512	23-34	118×75.5×34	0.28
PST8072	2	0.5-7.2	N/A	24-80	1-512	23-34	118×75.5×34	0.28
PST8060AC	2	2.4-7.2	20-80	24-110	2-256, 5-200	34-42	151×97×48	0.40
P3ST8082	3	0.5-8.2	N/A	24-80	1-512	17-34	118×75.5×34	0.28
▪ PSR Series:								
PSR5030	2	0.7-3.0	N/A	12-48	1-128	8-17	92×57×21	0.14
PSR5055	2	1.5-5.5	N/A	24-48	1-128	17-24	118×76×34	0.30
PSR8098	2	3.0-9.8	N/A	24-75	1-128	17-34	118×76×34	0.30

Description

Heat Sinking Method	Natural cooling or forced cooling	
Operating Environment	Environment	No corrosive gas, dust, water or oil
	Ambient Temperature	0 to +50 °C (+32 to +122 °F) (non-freezing)
	Humidity	90% or less (non-condensing)
	Operating Temperature	70°C Max
	Vibration	5.9m/s2 Max
Storage Temperature	-10 to +70 °C (+14 to +158 °F) (non-freezing)	

Control Signal Connections

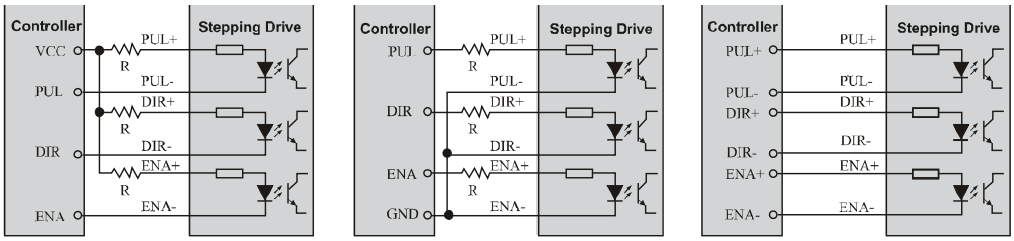

A. Connect to open-collector (common-anode) B. Connect to PNP signal (common-cathode) C. Connect to differential signal

Series connect resistors for current-limiting when +12V or +24V used. R=1K (>0.25W) if VCC=12V; R=2K (>0.25W) if VCC=24V.
Make sure that the current through the opto-coupler is between 7 mA and 16 mA.

Typical Connections

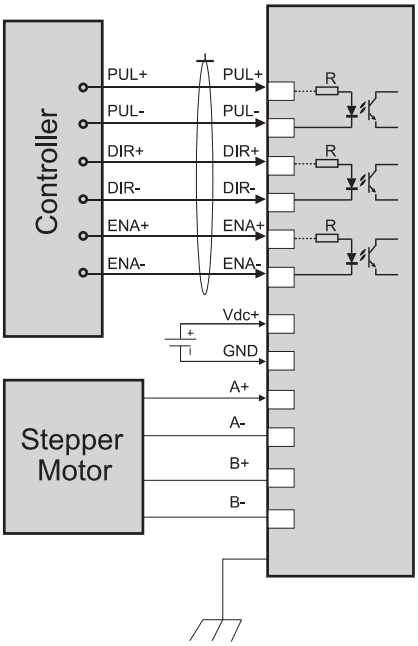

(a) Differential control sognals

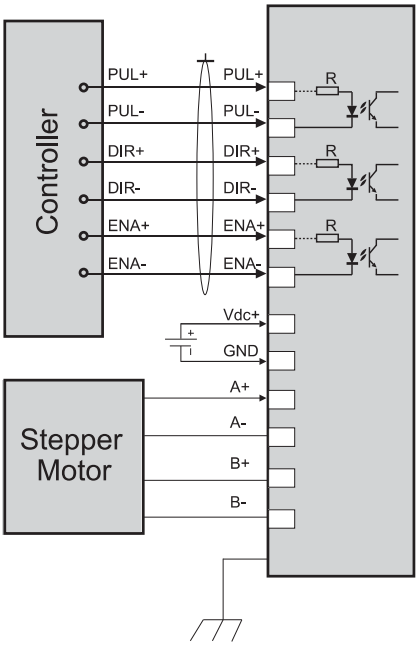

(b) Single-ended(NPN) cpmtrol signals

PST4030

Stepper Motor Drive

Introduction

The PST4030 is a versatility fully digital stepping driver based on ARM with advanced control algorithm. The PST4030 is the next generation of digital stepping motor controls. It brings a unique level of system smoothness, providing optimum torque and nulls mid-range instability. Motor self-test and parameter auto-setup technology offers optimum responses with different motors and easy-to-use. The driven motors can run with much smaller noise, lower heating, smoother movement than most of the drivers in the markets. Its unique features make the PST4030 an ideal solution for applications that require low-speed smoothness.

The stepper drive PST4030 is suitable for a wide range of stepping motors from NEMA size 8 to 17, which are used in various kinds of machines, such as 3D printers, X-Y tables, labeling machines, laser cutters, engraving machines, pick-place devices, and etc

Electrical Specifications

Parameters	Min	Typical	Max	Unit
Output current	0.14	-	3.0 (2.2RMS)	A
Supply voltage	+12	+24	+32	VDC
Logic signal current	6	10	16	mA
Pulse input frequency	0	-	160	kHz
Isolation resistance	500			MΩ

Function Description

Function	Description
Microstep Setting	Microstep resolution is programmable. When not in software configured mode, microstep resolution is set by SW5, 6, 7, 8 of the DIP switch. In order to avoid losing steps, do not change the microstep resolution on the fly.
Current Setting	Output current is programmable. When not in software configured mode, operating current is set by SW1, 2, 3, 4 of the DIP switch, which is Up to 3.0A.
Automatic Standstill Current Reduction	The current will be automatically reduced to 50% of the selected operating current 0.4 second after the last pulse.
Control Signals	PUL+ and PUL- are for the pulse command signal. DIR+ and DIR- are for the direction control signal. ENA+ and ENA are for the enable/disable control signal.
Motor Connector	A+, A- and B+, B- are for motor connections. Exchanging the connection of two wires for a coil to the drive will reverse default motion direction.
Power Connector	Recommended to use power supplies with output of +20 to 45VDC, leaving space for power fluctuation and back-EMF.
Indicators	There are two LED indicators on the drive for power and alarm signals. When the Green LED is on, the drive is powered up. When the Red LED is on, the drive is in fault status. When in fault status, the motor shaft will be free. Reset the drive by re☒ - powering it to make it function properly after solving problem(s).

Parameter Settings

Microstep resolution and output current are programmable. When not in software configured mode, the drive uses a 8-bit DIP switch to set microstep resolution and motor operating current, as shown below:

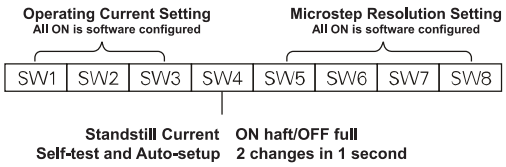

Mechanical Dimension

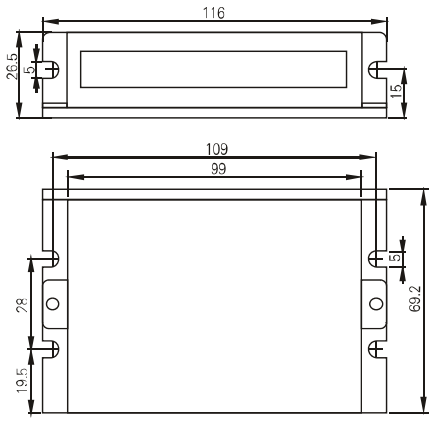

Operating Current Settings

Peak Current	RMS Current	SW1	SW2	SW3
Default/software configured (0.5-5.6A)		OFF	OFF	OFF
2.1A	1.5A	ON	OFF	OFF
2.7A	1.9A	OFF	ON	OFF
3.2A	2.3A	ON	ON	OFF
3.8A	2.7A	OFF	OFF	ON
4.3A	3.1A	ON	OFF	ON
4.9A	3.5A	OFF	ON	ON
5.6A	4.0A	ON	ON	ON

Microstep Resolution Settings

Microstep	Steps/Rev.	SW5	SW6	SW7	SW8
1-512	Default/Software configured	ON	ON	ON	ON
2	400	OFF	ON	ON	ON
4	800	ON	OFF	ON	ON
8	1600	OFF	OFF	ON	ON
16	3200	ON	ON	OFF	ON
32	6400	OFF	ON	OFF	ON
64	12800	ON	OFF	OFF	ON
128	25600	OFF	OFF	OFF	ON
5	1000	ON	ON	ON	OFF
10	2000	OFF	ON	ON	OFF
20	4000	ON	OFF	ON	OFF
25	5000	OFF	OFF	ON	OFF
40	8000	ON	ON	OFF	OFF
50	10000	OFF	ON	OFF	OFF
100	20000	ON	OFF	OFF	OFF
125	25000	OFF	OFF	OFF	OFF

PST4042

Stepper Motor Drive

Introduction

The stepper drive PST4042 is a versatility fully digital stepping drive based on a DSP with advanced control algorithm. It brings a unique level of system smoothness, providing optimum torque, nulls mid-range instability and good high speed performance. Motor auto-identification and parameter auto configuration technology offers optimum response with different motors. The driven motors can run with much lower noise, lower heating, smoother movement than most stepping drives on the market.

The stepper drive PST4042 is suitable for a wide range of stepping motors, from NEMA 14 to NEMA 23. It can be used in various kinds of machines, such as medical machines, laser cutters, laser markers, high precision X-Y tables, labeling machines, and so on. Its unique features make the PST4042 an ideal solution for applications that require low-speed smoothness and good high speed performance.

Electrical Specifications

Parameters	Min	Typical	Max	Unit
Output current	0.5	-	4.0 (3.0RMS)	A
Supply voltage	+20	+36	+40	VDC
Logic signal current	7	10	16	mA
Pulse input frequency	0	-	200	kHz
Isolation resistance	500			MΩ

Function Description

Function	Description
Microstep Setting	Microstep resolution is programmable. When not in software configured mode, microstep resolution is set by SW5, 6, 7, 8 of the DIP switch. In order to avoid losing steps, do not change the microstep resolution on the fly.
Current Setting	Output current is programmable. When not in software configured mode, operating current is set by SW1,2,3 of the DIP switch, which is Up to 5.6A.
Automatic Standstill Current Reduction	SW4 is used for the automatic standstill current reduction, self-test and auto-setup function. When the former active, the current will be automatically reduced to 60% of the selected operating current 0.4 second after the last pulse. Theoretically this will reduce motor heating to 36% (due to P=I2*R) of the original value.
Control Signals	If the user changes the status/position of SW4 twice in 1 second, the drive will self-test the driving motor and auto setup control parameters, offering optimum performance with different motors.
Motor Connector	A+, A- and B+, B- are for motor connections. Exchanging the connection of two wires for a coil to the drive will reverse default motion direction.
Power Connector	Recommended to use power supplies with output of +18 to 36VDC, leaving space for power fluctuation and back-EMF.
Indicators	There are two LED indicators on the drive for power and alarm signals. When the Green LED is on, the drive is powered up. When the Red LED is on, the drive is in fault status. When in fault status, the motor shaft will be free. Reset the drive by re - powering it to make it function properly after solving problem(s).

Parameter Settings

The drive uses a 8-bit DIP switch to set microstep resolution and motor operating current, as shown below:

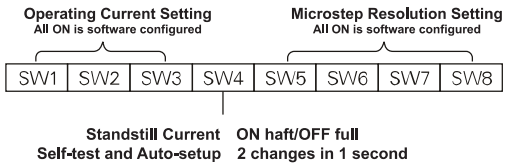

Mechanical Dimension

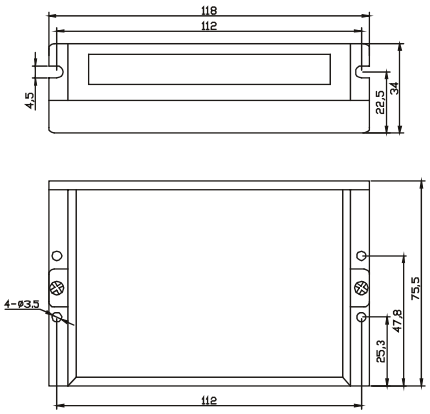

Operating Current Settings

Peak Current	RMS Current	SW1	SW2	SW3
Default/software configured (0.5-4.2A)		ON	ON	ON
1.46A	1.04A	OFF	ON	ON
1.91A	1.36A	ON	OFF	ON
2.37A	1.69A	OFF	OFF	ON
2.84A	2.03A	ON	ON	OFF
3.31A	2.36A	OFF	ON	OFF
3.76A	2.69A	ON	OFF	OFF
4.20A	3.00A	OFF	OFF	OFF

Microstep Resolution Settings

Microstep	Steps/Rev.	SW5	SW6	SW7	SW8
1-512	Default/Software configured	ON	ON	ON	ON
2	400	OFF	ON	ON	ON
4	800	ON	OFF	ON	ON
8	1600	OFF	OFF	ON	ON
16	3200	ON	ON	OFF	ON
32	6400	OFF	ON	OFF	ON
64	12800	ON	OFF	OFF	ON
128	25600	OFF	OFF	OFF	ON
5	1000	ON	ON	ON	OFF
10	2000	OFF	ON	ON	OFF
20	4000	ON	OFF	ON	OFF
25	5000	OFF	OFF	ON	OFF
40	8000	ON	ON	OFF	OFF
50	10000	OFF	ON	OFF	OFF
100	20000	ON	OFF	OFF	OFF
125	25000	OFF	OFF	OFF	OFF

PST5042

Stepper Motor Drive

Introduction

The stepper drive PST5042 is a versatility fully digital stepping drive based on a DSP with advanced control algorithm. It brings a unique level of system smoothness, providing optimum torque, nulls mid-range instability and good high speed performance. Motor auto-identification and parameter auto configuration technology offers optimum response with different motors. The driven motors can run with much lower noise, lower heating, smoother movement than most stepping drives on the market.

The stepper drive PST5042 is suitable for a wide range of stepping motors, from NEMA 14 to NEMA 24. It can be used in various kinds of machines, such as medical machines, laser cutters, laser markers, high precision X-Y tables, labeling machines, and so on. Its unique features make the PST5042 an ideal solution for applications that require low-speed smoothness and good high speed performance.

Electrical Specifications

Parameters	Min	Typical	Max	Unit
Output current	0.5	-	4.2 (3.0 RMS)	A
Supply voltage	+20	+36	+50	VDC
Logic signal current	6	10	16	mA
Pulse input frequency	0	-	200	kHz
Isolation resistance	500			MΩ

Function Description

Function	Description
Microstep Setting	16 selectable microstep resolutions up to 25,600 steps/rev. Set by SW5, 6, 7, 8 of the DIP switch.
Current Setting	Operating current is set by SW1,2,3 of the DIP switch, which is Up to 4.2A.
Automatic Standstill Current Reduction	The current will be automatically reduced to 50% of the selected operating current 0.4 second after the last pulse.
Control Signals	PUL+ and PUL- are for the pulse command signal. DIR+ and DIR- are for the direction control signal. ENA+ and ENA are for the enable/disable control signal.
Motor Connector	A+, A- and B+, B- are for motor connections. Exchanging the connection of two wires for a coil to the drive will reverse default motion direction.
Power Connector	Recommended to use power supplies with output of +24 to 48VDC, leaving space for power fluctuation and back-EMF.
Indicators	There are two LED indicators on the drive for power and alarm signals. When the Green LED is on, the drive is powered up. When the Red LED is on, the drive is in fault status. When in fault status, the motor shaft will be free. Reset the drive by re-powering it to make it function properly after solving problem(s).

Parameter Settings

Microstep resolution and output current are programmable. When not in software configured mode, the drive uses a 8-bit DIP switch to set microstep resolution and motor operating current, as shown below:

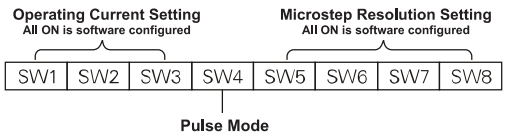

Mechanical Dimension

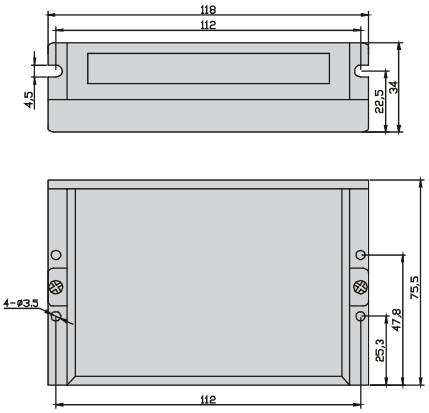

Operating Current Settings

Peak Current	RMS Current	SW1	SW2	SW3
Default [0.7A]		ON	ON	ON
1.46A	1.04A	OFF	ON	ON
1.91A	1.36A	ON	OFF	ON
2.37A	1.69A	OFF	OFF	ON
2.84A	2.03A	ON	ON	OFF
3.31A	2.36A	OFF	ON	OFF
3.76A	2.69A	ON	OFF	OFF
4.20A	3.00A	OFF	OFF	OFF

Microstep Resolution Settings

Microstep	Steps/Rev.	SW5	SW6	SW7	SW8
1	200	ON	ON	ON	ON
2	400	OFF	ON	ON	ON
4	800	ON	OFF	ON	ON
8	1600	OFF	OFF	ON	ON
16	3200	ON	ON	OFF	ON
32	6400	OFF	ON	OFF	ON
64	12800	ON	OFF	OFF	ON
128	25600	OFF	OFF	OFF	ON
5	1000	ON	ON	ON	OFF
10	2000	OFF	ON	ON	OFF
20	4000	ON	OFF	ON	OFF
25	5000	OFF	OFF	ON	OFF
40	8000	ON	ON	OFF	OFF
50	10000	OFF	ON	OFF	OFF
100	20000	ON	OFF	OFF	OFF
125	25000	OFF	OFF	OFF	OFF

Pulse Mode Settings

SW4	Pulse Mode
ON	CW + CCW
OFF	PUL + DIR

PST5056

Stepper Motor Drive

Introduction

The stepper drive PST5056 is a versatility fully digital stepping drive based on a DSP with advanced control algorithm. It brings a unique level of system smoothness, providing optimum torque, nulls mid-range instability and good high speed performance. Motor auto-identification and parameter auto configuration technology offers optimum response with different motors. The driven motors can run with much lower noise, lower heating, smoother movement than most stepping drives on the market.

The stepper drive PST5056 is suitable for a wide range of stepping motors, from NEMA 17 to NEMA 23. It can be used in various kinds of machines, such as medical machines, laser cutters, laser markers, high precision X-Y tables, labeling machines, and so on. Its unique features make the PST5056 an ideal solution for applications that require low-speed smoothness and good high speed performance.

Electrical Specifications

Parameters	Min	Typical	Max	Unit
Output current	0.5	-	5.6 (4.0RMS)	A
Supply voltage	+20	+36	+50	VDC
Logic signal current	7	10	16	mA
Pulse input frequency	0	-	200	kHz
Isolation resistance	500			MΩ

Function Description

Function	Description
Microstep Setting	Microstep resolution is programmable. When not in software configured mode, microstep resolution is set by SW5, 6, 7, 8 of the DIP switch. In order to avoid losing steps, do not change the microstep resolution on the fly.
Current Setting	Output current is programmable. When not in software configured mode, operating current is set by SW1,2,3 of the DIP switch, which is Up to 5.6A.
Automatic Standstill Current Reduction Self-test and Auto-setup	SW4 is used for the automatic standstill current reduction, self-test and auto-setup function. When the former active, the current will be automatically reduced to 60% of the selected operating current 0.4 second after the last pulse. Theoretically this will reduce motor heating to 36% (due to P=I2*R) of the original value. If the user changes the status/position of SW4 twice in 1 second, the drive will self-test the driving motor and auto setup control parameters, offering optimum performance with different motors.
Control Signals	PUL+ and PUL- are for the pulse command signal. DIR+ and DIR- are for the direction control signal. ENA+ and ENA are for the enable/disable control signal.
Motor Connector	A+, A- and B+, B- are for motor connections. Exchanging the connection of two wires for a coil to the drive will reverse default motion direction.
Power Connector	Recommended to use power supplies with output of +18 to 36VDC, leaving space for power fluctuation and back-EMF.
Indicators	There are two LED indicators on the drive for power and alarm signals. When the Green LED is on, the drive is powered up. When the Red LED is on, the drive is in fault status. When in fault status, the motor shaft will be free. Reset the drive by re powering it to make it function properly after solving problem(s).

Parameter Settings

Microstep resolution and output current are programmable. When not in software configured mode, the drive uses a 8-bit DIP switch to set microstep resolution and motor operating current, as shown below:

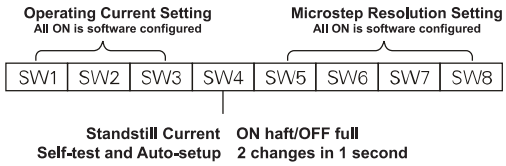

Mechanical Dimension

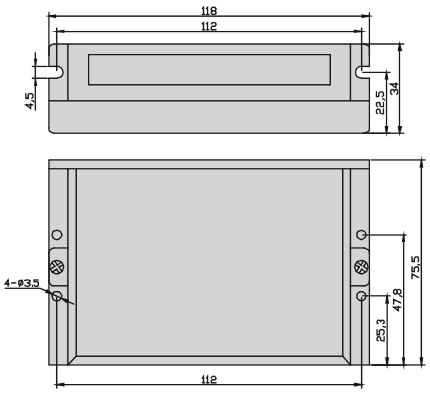

Operating Current Settings

Peak Current	RMS Current	SW1	SW2	SW3
Default/software configured (0.5-4.2A)		ON	ON	ON
1.46A	1.04A	OFF	ON	ON
1.91A	1.36A	ON	OFF	ON
2.37A	1.69A	OFF	OFF	ON
2.84A	2.03A	ON	ON	OFF
3.31A	2.36A	OFF	ON	OFF
3.76A	2.69A	ON	OFF	OFF
4.20A	3.00A	OFF	OFF	OFF

Microstep Resolution Settings

Microstep	Steps/Rev.	SW5	SW6	SW7	SW8
1-512	Default/Software configured	ON	ON	ON	ON
2	400	OFF	ON	ON	ON
4	800	ON	OFF	ON	ON
8	1600	OFF	OFF	ON	ON
16	3200	ON	ON	OFF	ON
32	6400	OFF	ON	OFF	ON
64	12800	ON	OFF	OFF	ON
128	25600	OFF	OFF	OFF	ON
5	1000	ON	ON	ON	OFF
10	2000	OFF	ON	ON	OFF
20	4000	ON	OFF	ON	OFF
25	5000	OFF	OFF	ON	OFF
40	8000	ON	ON	OFF	OFF
50	10000	OFF	ON	OFF	OFF
100	20000	ON	OFF	OFF	OFF
125	25000	OFF	OFF	OFF	OFF

PST8056

Stepper Motor Drive

Introduction

The stepper drive PST8072 is a versatility fully digital stepping drive based on a DSP with advanced control algorithm. It brings a unique level of system smoothness, providing optimum torque, nulls mid-range instability and good high speed performance. Motor auto-identification and parameter auto configuration technology offers optimum response with different motors. The driven motors can run with much lower noise, lower heating, smoother movement than most stepping drives on the market.

The stepper drive PST8056 is suitable for a wide range of stepping motors, from NEMA 23 to NEMA 34. It can be used in various kinds of machines, such as medical machines, laser cutters, laser markers, high precision X-Y tables, labeling machines, and so on. Its unique features make the PST8072 an ideal solution for applications that require low-speed smoothness and good high speed performance.

Electrical Specifications

Parameters	Min	Typical	Max	Unit
Output current	0.5	-	5.6 (4.0RMS)	A
Supply voltage	+20	-	+80	VDC
Logic signal current	7	10	16	mA
Pulse input frequency	0	-	200	kHz
Isolation resistance	500			MΩ

Function Description

Function	Description
Microstep Setting	Microstep resolution is programmable. When not in software configured mode, microstep resolution is set by SW5, 6, 7, 8 of the DIP switch. In order to avoid losing steps, do not change the microstep resolution on the fly.
Current Setting	Output current is programmable. When not in software configured mode, operating current is set by SW1,2,3 of the DIP switch, which is Up to 5.6A.
Automatic Standstill Current Reduction Self-test and Auto-setup	SW4 is used for the automatic standstill current reduction, self-test and auto-setup function. When the former active, the current will be automatically reduced to 60% of the selected operating current 0.4 second after the last pulse. Theoretically this will reduce motor heating to 36% (due to P=I2*R) of the original value. If the user changes the status/position of SW4 twice in 1 second, the drive will self-test the driving motor and auto setup control parameters, offering optimum performance with different motors.
Control Signals	PUL+ and PUL- are for the pulse command signal. DIR+ and DIR- are for the direction control signal. ENA+ and ENA are for the enable/disable control signal.
Motor Connector	A+, A- and B+, B- are for motor connections. Exchanging the connection of two wires for a coil to the drive will reverse default motion direction.
Power Connector	Recommended to use power supplies with output of +20 to 45VDC, leaving space for power fluctuation and back-EMF.
Indicators	There are two LED indicators on the drive for power and alarm signals. When the Green LED is on, the drive is powered up. When the Red LED is on, the drive is in fault status. When in fault status, the motor shaft will be free. Reset the drive by re powering it to make it function properly after solving problem(s).

Parameter Settings

Microstep resolution and output current are programmable. When not in software configured mode, the drive uses a 8-bit DIP switch to set microstep resolution and motor operating current, as shown below:

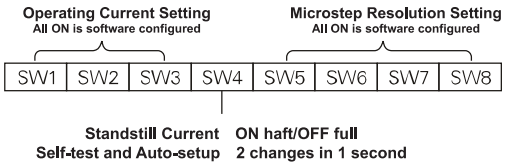

Mechanical Dimension

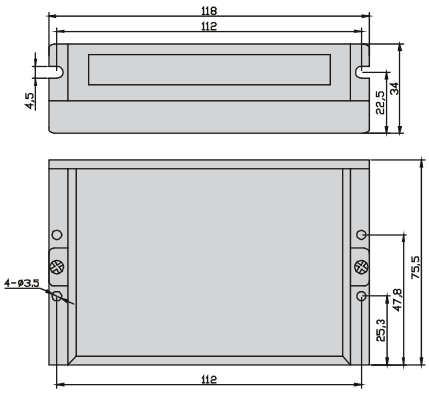

Operating Current Settings

Peak Current	RMS Current	SW1	SW2	SW3
Default/software configured (0.5-5.6A)		OFF	OFF	OFF
2.1A	1.5A	ON	OFF	OFF
2.7A	1.9A	OFF	ON	OFF
3.2A	2.3A	ON	ON	OFF
3.8A	2.7A	OFF	OFF	ON
4.3A	3.1A	ON	OFF	ON
4.9A	3.5A	OFF	ON	ON
5.6A	4.0A	ON	ON	ON

Microstep Resolution Settings

Microstep	Steps/Rev.	SW5	SW6	SW7	SW8
1-512	Default/Software configured	ON	ON	ON	ON
2	400	OFF	ON	ON	ON
4	800	ON	OFF	ON	ON
8	1600	OFF	OFF	ON	ON
16	3200	ON	ON	OFF	ON
32	6400	OFF	ON	OFF	ON
64	12800	ON	OFF	OFF	ON
128	25600	OFF	OFF	OFF	ON
5	1000	ON	ON	ON	OFF
10	2000	OFF	ON	ON	OFF
20	4000	ON	OFF	ON	OFF
25	5000	OFF	OFF	ON	OFF
40	8000	ON	ON	OFF	OFF
50	10000	OFF	ON	OFF	OFF
100	20000	ON	OFF	OFF	OFF
125	25000	OFF	OFF	OFF	OFF

PST8072

Stepper Motor Drive

Introduction

The stepper drive PST8072 is a versatility fully digital stepping drive based on a DSP with advanced control algorithm. It brings a unique level of system smoothness, providing optimum torque, nulls mid-range instability and good high speed performance. Motor auto-identification and parameter auto-configuration technology offers optimum response with different motors. The driven motors can run with much lower noise, lower heating, smoother movement than most stepping drives on the market.

The stepper drive PST8072 is suitable for a wide range of stepping motors, from NEMA 23 to NEMA 34. It can be used in various kinds of machines, such as medical machines, laser cutters, laser markers, high precision X-Y tables, labeling machines, and so on. Its unique features make the PST8072 an ideal solution for applications that require low-speed smoothness and good high speed performance.

Electrical Specifications

Parameters	Min	Typical	Max	Unit
Output current	0.5	-	7.2 (6.0 RMS)	A
Supply voltage	+24	+48	+75	VDC
Logic signal current	7	10	16	mA
Pulse input frequency	0	-	200	kHz
Isolation resistance	500			MΩ

Function Description

Function	Description
Microstep Setting	Microstep resolution is programmable. When not in software configured mode, microstep resolution is set by SW5, 6, 7, 8 of the DIP switch. In order to avoid losing steps, do not change the microstep resolution on the fly.
Current Setting	Output current is programmable. When not in software configured mode, operating current is set by SW1,2,3 of the DIP switch, which is Up to 7.2A.
Automatic Standstill Current Reduction	SW4 is used for the automatic standstill current reduction, self-test and auto-setup function. When the former active, the current will be automatically reduced to 60% of the selected operating current 0.4 second after the last pulse. Theoretically, this will reduce motor heating to 36% (due to P=I2*R) of the original value.
Self-test and Auto-setup	If the user changes the status/position of SW4 twice in 1 second, the drive will self-test the driving motor and auto setup control parameters, offering optimum performance with different motors.
Control Signals	PUL+ and PUL- are for the pulse command signal. DIR+ and DIR- are for the direction control signal. ENA+ and ENA are for the enable/disable control signal.
Motor Connector	A+, A- and B+, B- are for motor connections. Exchanging the connection of two wires for a coil to the drive will reverse default motion direction.
Power Connector	Recommended to use power supplies with output of +24 to 75VDC, leaving space for power fluctuation and back-EMF.
Indicators	There are two LED indicators on the drive for power and alarm signals. When the Green LED is on, the drive is powered up. When the Red LED is on, the drive is in fault status. When in fault status, the motor shaft will be free. Reset the drive by re powering it to make it function properly after solving problem(s).

Parameter Settings

Microstep resolution and output current are programmable. When not in software configured mode, the drive uses a 8-bit DIP switch to set microstep resolution and motor operating current, as shown below:

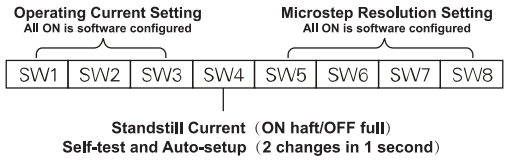

Mechanical Dimension

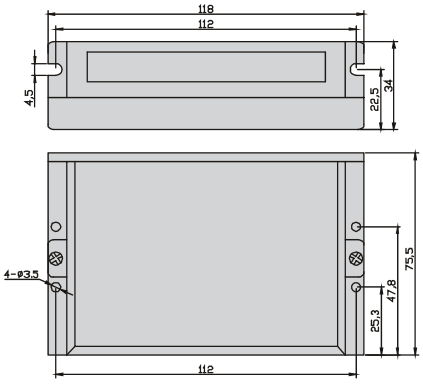

Operating Current Settings

Peak Current	RMS Current	SW1	SW2	SW3
Default/software configured (0.5-7.2A)		ON	ON	ON
3.08A	2.57A	OFF	ON	ON
3.77A	3.14A	ON	OFF	ON
4.45A	3.71A	OFF	OFF	ON
5.14A	4.28A	ON	ON	OFF
5.83A	4.86A	OFF	ON	OFF
6.52A	5.43A	ON	OFF	OFF
7.20A	6.00A	OFF	OFF	OFF

Microstep Resolution Settings

Microstep	Steps/Rev.	SW5	SW6	SW7	SW8
1-512	Default/Software configured	ON	ON	ON	ON
2	400	ON	ON	ON	ON
4	800	OFF	ON	ON	ON
8	1600	ON	OFF	OFF	ON
16	3200	OFF	OFF	OFF	ON
32	6400	ON	ON	ON	ON
64	12800	OFF	ON	ON	ON
128	25600	ON	OFF	OFF	ON
256	51200	OFF	OFF	OFF	ON
5	1000	ON	ON	ON	OFF
10	2000	OFF	ON	ON	OFF
20	4000	ON	OFF	OFF	OFF
25	5000	OFF	OFF	OFF	OFF
40	8000	ON	ON	ON	OFF
50	10000	OFF	ON	OFF	OFF
100	20000	ON	OFF	OFF	OFF
200	40000	OFF	OFF	OFF	OFF

PST8060AC

Stepper Motor Drive

Introduction

The stepper drive PST8060AC is a versatility fully digital stepping drive based on a DSP with advanced control algorithm. It brings a unique level of system smoothness, providing optimum torque, nulls mid-range instability and good high speed performance. Motor auto-identification and parameter auto configuration technology offers optimum response with different motors. The driven motors can run with much lower noise, lower heating, smoother movement than most stepping drives on the market.

The stepper drive PST8060AC is suitable for a wide range of stepping motors, from NEMA 23 to NEMA 42. It can be used in various kinds of machines, such as medical machines, laser cutters, laser markers, high precision X-Y tables, labeling machines, and so on. Its unique features make the PST8060AC an ideal solution for applications that require low-speed smoothness and good high speed performance.

Electrical Specifications

Parameters	Min	Typical	Max	Unit
Output current	02.4	-	7.2 (6.0 RMS)	A
Supply voltage	20	48	80	VAC
	+24	+72	+110	VDC
Logic signal current	7	10	16	mA
Pulse input frequency	0	-	200	kHz
Isolation resistance	500			MΩ

Function Description

Function	Description
Microstep Setting	16 selectable microstep resolutions up to 51,200 steps/rev. Set by SW5, 6, 7, 8 of the DIP switch.
Current Setting	Operating current is set by SW1,2,3 of the DIP switch, which is Up to 7.2A.
Automatic Standstill Current Reduction	SW4 is used for the automatic standstill current reduction, self-test and auto-setup function. When the former active, the current will be automatically reduced to 60% of the selected operating current 0.4 second after the last pulse. Theoretically, this will reduce motor heating to 36% (due to P=I2*R) of the original value.
Self-test and Auto-setup	If the user changes the status/position of SW4 twice in 1 second, the drive will self-test the driving motor and auto setup control parameters, offering optimum performance with different motors.
Control Signals	PUL+ and PUL- are for the pulse command signal. DIR+ and DIR- are for the direction control signal. ENA+ and ENA are for the enable/disable control signal.
Motor Connector	A+, A- and B+, B- are for motor connections. Exchanging the connection of two wires for a coil to the drive will reverse default motion direction.
Power Connector	Recommended to use power supplies with output of 24 to 75VAC, leaving space for power fluctuation and back-EMF.
Indicators	There are two LED indicators on the drive for power and alarm signals. When the Green LED is on, the drive is powered up. When the Red LED is on, the drive is in fault status. When in fault status, the motor shaft will be free. Reset the drive by re - powering it to make it function properly after solving problem(s).

Parameter Settings

Microstep resolution and output current are programmable. When not in software configured mode, the drive uses a 8-bit DIP switch to set microstep resolution and motor operating current, as shown below:

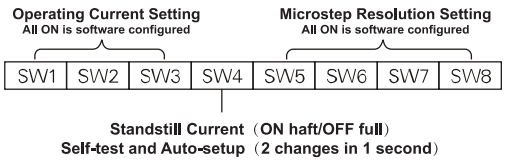

Mechanical Dimension

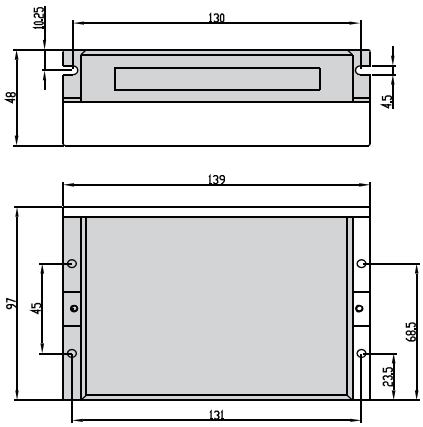

Operating Current Settings

Peak Current	RMS Current	SW1	SW2	SW3
2.40A	2.00A	ON	ON	ON
3.08A	2.57A	OFF	ON	ON
3.77A	3.14A	ON	OFF	ON
4.45A	3.71A	OFF	OFF	ON
5.14A	4.28A	ON	ON	OFF
5.83A	4.86A	OFF	ON	OFF
6.52A	5.43A	ON	OFF	OFF
7.20A	6.00A	OFF	OFF	OFF

Microstep Resolution Settings

Microstep	Steps/Rev.	SW5	SW6	SW7	SW8
2	400	ON	ON	ON	ON
4	800	OFF	ON	ON	ON
8	1600	ON	OFF	ON	ON
16	3200	OFF	OFF	ON	ON
32	6400	ON	ON	OFF	ON
64	12800	OFF	ON	OFF	ON
128	25600	ON	OFF	OFF	ON
256	51200	OFF	OFF	OFF	ON
5	1000	ON	ON	ON	OFF
10	2000	OFF	ON	ON	OFF
20	4000	ON	OFF	ON	OFF
25	5000	OFF	OFF	ON	OFF
40	8000	ON	ON	OFF	OFF
50	10000	OFF	ON	OFF	OFF
100	20000	ON	OFF	OFF	OFF
200	40000	OFF	OFF	OFF	OFF

P3ST8082

Stepper Motor Drive

Introduction

The stepper drive P3ST8082 is a versatility fully digital 3-phase stepping drive based on a DSP with advanced control algorithm. It brings a unique level of system smoothness, providing optimum torque, nulls midrange instability and good high speed performance. Motor auto-identification and parameter auto configuration technology offers optimum response with different motors. The driven motors can run with much lower noise, lower heating, smoother movement than most stepping drives on the market.

The stepper drive P3ST8082 is suitable for a wide range of stepping motors, from NEMA 17 to NEMA 34. It can be used in various kinds of machines, such as medical machines, laser cutters, laser markers, high precision X-Y tables, labeling machines, and so on. Its unique features make the P3ST8082 an ideal solution for applications that require low-speed smoothness and good high speed performance.

Electrical Specifications

Parameters	Min	Typical	Max	Unit
Output current	0.5	-	8.2 (6.0 RMS)	A
Supply voltage	+24	+36	+75	VDC
Logic signal current	7	10	16	mA
Pulse input frequency	0	-	200	kHz
Isolation resistance	500			MΩ

Function Description

Function	Description
Microstep Setting	Microstep resolution is programmable. When not in software configured mode, microstep resolution is set by SW5, 6, 7, 8 of the DIP switch. In order to avoid losing steps, do not change the microstep resolution on the fly.
Current Setting	Output current is programmable. When not in software configured mode, operating current is set by SW1,2,3 of the DIP switch, which is Up to 8.2A.
Automatic Standstill Current Reduction Self-test and Auto-setup	SW4 is used for the automatic standstill current reduction, self-test and auto-setup function. When the former active, the current will be automatically reduced to 60% of the selected operating current 0.4 second after the last pulse. Theoretically, this will reduce motor heating to 36% (due to P=I2*R) of the original value. If the user changes the status/position of SW4 twice in 1 second, the drive will self-test the driving motor and auto setup control parameters, offering optimum performance with different motors.
Control Signals	PUL+ and PUL- are for the pulse command signal. DIR+ and DIR- are for the direction control signal. ENA+ and ENA are for the enable/disable control signal.
Motor Connector	A+, A- and B+, B- are for motor connections. Exchanging the connection of two wires for a coil to the drive will reverse default motion direction.
Power Connector	Recommended to use power supplies with output of +24 to 75VDC, leaving space for power fluctuation and back-EMF.
Indicators	There are two LED indicators on the drive for power and alarm signals. When the Green LED is on, the drive is powered up. When the Red LED is on, the drive is in fault status. When in fault status, the motor shaft will be free. Reset the drive by re - powering it to make it function properly after solving problem(s).

Parameter Settings

Microstep resolution and output current are programmable. When not in software configured mode, the drive uses a 8-bit DIP switch to set microstep resolution and motor operating current, as shown below:

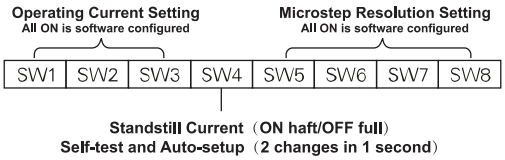

Mechanical Dimension

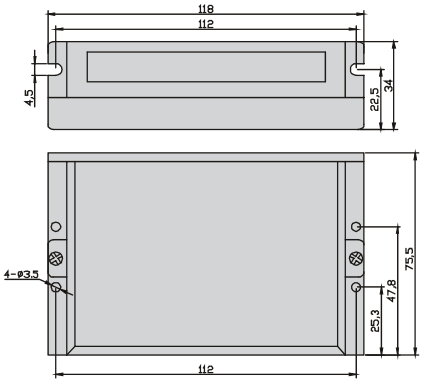

Operating Current Settings

Peak Current	RMS Current	SW1	SW2	SW3
Default/software configured (0.5-8.2A)		ON	ON	ON
4.2A	3.0A	OFF	ON	ON
4.9A	3.5A	ON	OFF	ON
5.6A	4.0A	OFF	OFF	ON
6.3A	4.5A	ON	ON	OFF
7.0A	5.0A	OFF	ON	OFF
7.8A	5.5A	ON	OFF	OFF
8.2A	6.0A	OFF	OFF	OFF

Microstep Resolution Settings

Microstep	Steps/Rev.	SW5	SW6	SW7	SW8
1-512	Default/Software configured	ON	ON	ON	ON
2	400	OFF	ON	ON	ON
4	800	ON	OFF	ON	ON
8	1600	OFF	OFF	ON	ON
16	3200	ON	ON	OFF	ON
32	6400	OFF	ON	OFF	ON
64	12800	ON	OFF	OFF	ON
128	25600	OFF	OFF	OFF	ON
5	1000	ON	ON	ON	OFF
10	2000	OFF	ON	ON	OFF
20	4000	ON	OFF	ON	OFF
25	5000	OFF	OFF	ON	OFF
40	8000	ON	ON	OFF	OFF
50	10000	OFF	ON	OFF	OFF
100	20000	ON	OFF	OFF	OFF
125	25000	OFF	OFF	OFF	OFF

PSR5030

Stepper Motor Drive

Introduction

Thank for choosing the PSR serial motor drive.The PSR5030 is a new digital stepping motor drive based on a 32-bit DSP with advanced control algorithm.It brings a unique level of system smoothness,providing optimum torque and nulls mid-range instability.Motor self-test and parameter auto-tunning technology offers optimum responses with different motors and easy-to-user.The Driven motors can run with much smaller noise,lower heating,smoother movement.

Electrical Specifications

Parameters	Min	Typical	Max	Unit
Output current	0.7	-	3	A
Supply voltage	12	-	48	VDC
Input Signal Voltage	4.0	5.0	28.0	VDC
Step Frequency	2	-	-	Hs
Pulse Width Hi and Low	250	-	-	Ns
Drive initialization time	-	-	-	MΩ

Function Description

Function	Description
Microstep Setting	16 selectable microstep resolutions up to 51,200 steps/rev. Set by SW5, 6, 7, 8 of the DIP switch.
Current Setting	Operating current is set by SW1,2,3 of the DIP switch, which is Up to 7.2A.
Automatic Standstill Current Reduction	SW4 is used for the automatic standstill current reduction, self-test and auto-setup function. When the former active, the current will be automatically reduced to 60% of the selected operating current 0.4 second after the last pulse. Theoretically, this will reduce motor heating to 36% (due to P=I2*R) of the original value.
Self-test and Auto-setup	If the user changes the status/position of SW4 twice in 1 second, the drive will self-test the driving motor and auto setup control parameters, offering optimum performance with different motors.
Control Signals	PUL+ and PUL- are for the pulse command signal. DIR+ and DIR- are for the direction control signal. ENA+ and ENA are for the enable/disable control signal.
Motor Connector	A+, A- and B+, B- are for motor connections. Exchanging the connection of two wires for a coil to the drive will reverse default motion direction.
Power Connector	Recommended to use power supplies with output of 24 to 75VAC, leaving space for power fluctuation and back-EMF.
Indicators	There are two LED indicators on the drive for power and alarm signals. When the Green LED is on, the drive is powered up. When the Red LED is on, the drive is in fault status. When in fault status, the motor shaft will be free. Reset the drive by re - powering it to make it function properly after solving problem(s).

Parameter Settings

Microstep resolution and output current are programmable. When not in software configured mode, the drive uses a 8-bit DIP switch to set microstep resolution and motor operating current, as shown below:

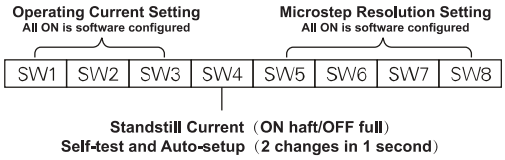

Mechanical Dimension

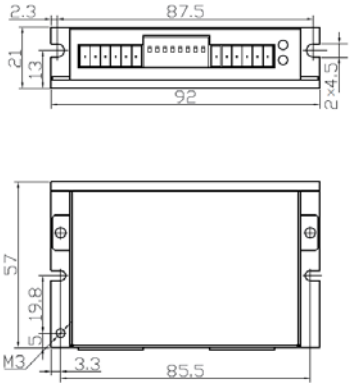

Operating Current Settings

Peak Current	RMS Current	SW1	SW2	SW3
0.7A	0.5A	ON	ON	ON
1.0A	0.7A	OFF	ON	ON
1.3A	0.9A	ON	OFF	ON
1.6A	1.1A	OFF	OFF	ON
1.9A	1.3A	ON	ON	OFF
2.2A	1.6A	OFF	ON	OFF
2.7A	1.9A	ON	OFF	OFF
3.0A	2.2A	OFF	OFF	OFF

Microstep Resolution Settings

Steps/Rev.	SW5	SW6	SW7	SW8
200	ON	ON	ON	ON
400	OFF	ON	ON	ON
800	ON	OFF	ON	ON
1600	OFF	OFF	ON	ON
3200	ON	ON	OFF	ON
6400	OFF	ON	OFF	ON
12800	ON	OFF	OFF	ON
25600	OFF	OFF	OFF	ON
1000	ON	ON	ON	OFF
2000	OFF	ON	ON	OFF
4000	ON	OFF	ON	OFF
5000	OFF	OFF	ON	OFF
8000	ON	ON	OFF	OFF
10000	OFF	ON	OFF	OFF
20000	ON	OFF	OFF	OFF
25000	OFF	OFF	OFF	OFF

PSR5055

Stepper Motor Drive

Introduction

Thank for choosing the PSR serial motor drive. The PSR5055 is a new digital stepping motor drive based on a 32-bit DSP with advanced control algorithm. It brings a unique level of system smoothness, providing optimum torque and nulls mid-range instability. Motor self-test and parameter auto-tunning technology offers optimum responses with different motors and easy-to-user. The Driven motors can run with much smaller noise, lower heating, smoother movement.

Electrical Specifications

Parameters	Min	Typical	Max	Unit
Output current	1.5	-	5.5	A
Supply voltage	24	-	48	VDC
Input Signal Voltage	4.0	5.0	28.0	VDC
Step Frequency	2	-	1M	Hs
Pulse Width Hi and Low	250	-	-	Ns
Drive initialization time	-	-	2	S

Function Description

Function	Description
Microstep Setting	Microstep resolution is programmable. When not in software configured mode, microstep resolution is set by SW5, 6, 7, 8 of the DIP switch. In order to avoid losing steps, do not change the microstep resolution on the fly.
Current Setting	Output current is programmable. When not in software configured mode, operating current is set by SW1,2,3 of the DIP switch, which is Up to 8.2A.
Automatic Standstill Current Reduction Self-test and Auto-setup	SW4 is used for the automatic standstill current reduction, self-test and auto-setup function. When the former active, the current will be automatically reduced to 60% of the selected operating current 0.4 second after the last pulse. Theoretically, this will reduce motor heating to 36% (due to P=I2*R) of the original value. If the user changes the status/position of SW4 twice in 1 second, the drive will self-test the driving motor and auto setup control parameters, offering optimum performance with different motors.
Control Signals	PUL+ and PUL- are for the pulse command signal. DIR+ and DIR- are for the direction control signal. ENA+ and ENA are for the enable/disable control signal.
Motor Connector	A+, A- and B+, B- are for motor connections. Exchanging the connection of two wires for a coil to the drive will reverse default motion direction.
Power Connector	Recommended to use power supplies with output of +24 to 75VDC, leaving space for power fluctuation and back-EMF.
Indicators	There are two LED indicators on the drive for power and alarm signals. When the Green LED is on, the drive is powered up. When the Red LED is on, the drive is in fault status. When in fault status, the motor shaft will be free. Reset the drive by re - powering it to make it function properly after solving problem(s).

Parameter Settings

Microstep resolution and output current are programmable. When not in software configured mode, the drive uses a 8-bit DIP switch to set microstep resolution and motor operating current, as shown below:

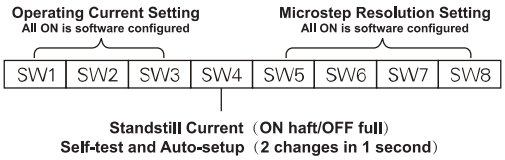

Mechanical Dimension

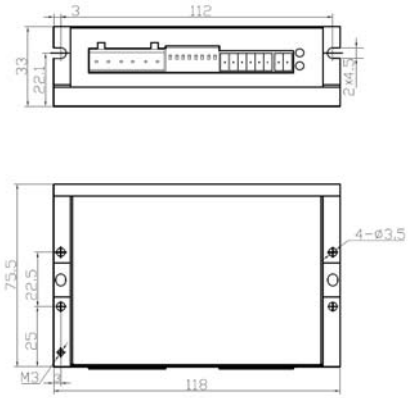

Operating Current Settings

Peak Current	RMS Current	SW1	SW2	SW3
1.5A	1.1A	ON	ON	ON
1.8A	1.3A	OFF	ON	ON
2.2A	1.6A	ON	OFF	ON
2.8A	2.0A	OFF	OFF	ON
3.5A	2.5A	ON	ON	OFF
4.0A	2.9A	OFF	ON	OFF
4.8A	3.4A	ON	OFF	OFF
5.5A	4.0A	OFF	OFF	OFF

Microstep Resolution Settings

Steps/Rev.	SW5	SW6	SW7	SW8
200	ON	ON	ON	ON
400	OFF	ON	ON	ON
800	ON	OFF	ON	ON
1600	OFF	OFF	ON	ON
3200	ON	ON	OFF	ON
6400	OFF	ON	OFF	ON
12800	ON	OFF	OFF	ON
25600	OFF	OFF	OFF	ON
1000	ON	ON	ON	OFF
2000	OFF	ON	ON	OFF
4000	ON	OFF	ON	OFF
5000	OFF	OFF	ON	OFF
8000	ON	ON	OFF	OFF
10000	OFF	ON	OFF	OFF
20000	ON	OFF	OFF	OFF
25000	OFF	OFF	OFF	OFF

PSR8098

Stepper Motor Drive

Introduction

Thank for choosing the PSR serial motor drive.The PSR8098 is a new digital stepping motor drive based on a 32-bit DSP with advanced control algorithm.It brings a unique level of system smoothness,providing optimum torque and nulls mid-range instability.Motor self-test and parameter auto-tunning technology offers optimum responses with different motors and easy-to-user.The Driven motors can run with much smaller noise,lower heating,smoother movement.

Electrical Specifications

Parameters	Min	Typical	Max	Unit
Output current	3.0	-	9.8	A
Supply voltage	24	-	75	VDC
Input Signal Voltage	4.0	5.0	28.0	VDC
Step Frequency	2	-	1M	Hs
Pulse Width Hi and Low	250	-	-	Ns
Drive initialization time	-	-	2	S

Function Description

Function	Description
Microstep Setting	16 selectable microstep resolutions up to 51,200 steps/rev. Set by SW5, 6, 7, 8 of the DIP switch.
Current Setting	Operating current is set by SW1,2,3 of the DIP switch, which is Up to 7.2A.
Automatic Standstill Current Reduction	SW4 is used for the automatic standstill current reduction, self-test and auto-setup function. When the former active, the current will be automatically reduced to 60% of the selected operating current 0.4 second after the last pulse. Theoretically, this will reduce motor heating to 36% (due to P=I2*R) of the original value.
Self-test and Auto-setup	If the user changes the status/position of SW4 twice in 1 second, the drive will self-test the driving motor and auto setup control parameters, offering optimum performance with different motors.
Control Signals	PUL+ and PUL- are for the pulse command signal. DIR+ and DIR- are for the direction control signal. ENA+ and ENA are for the enable/disable control signal.
Motor Connector	A+, A- and B+, B- are for motor connections. Exchanging the connection of two wires for a coil to the drive will reverse default motion direction.
Power Connector	Recommended to use power supplies with output of 24 to 75VAC, leaving space for power fluctuation and back-EMF.
Indicators	There are two LED indicators on the drive for power and alarm signals. When the Green LED is on, the drive is powered up. When the Red LED is on, the drive is in fault status. When in fault status, the motor shaft will be free. Reset the drive by re - powering it to make it function properly after solving problem(s).

Parameter Settings

Microstep resolution and output current are programmable. When not in software configured mode, the drive uses a 8-bit DIP switch to set microstep resolution and motor operating current, as shown below:

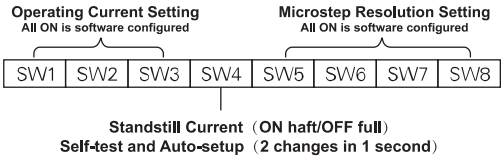

Mechanical Dimension

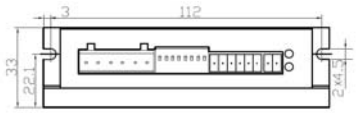

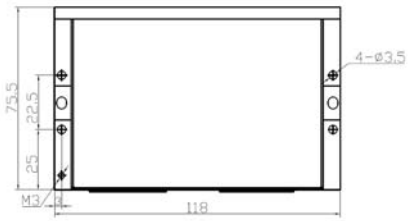

Operating Current Settings

Peak Current	RMS Current	SW1	SW2	SW3
3.0A	2.2A	ON	ON	ON
4.2A	3.0A	OFF	ON	ON
4.8A	3.4A	ON	OFF	ON
5.6A	4.0A	OFF	OFF	ON
6.5A	4.6A	ON	ON	OFF
7.2A	5.1A	OFF	ON	OFF
8.4A	6.0A	ON	OFF	OFF
9.8A	7.0A	OFF	OFF	OFF

Microstep Resolution Settings

Steps/Rev.	SW5	SW6	SW7	SW8
200	ON	ON	ON	ON
400	OFF	ON	ON	ON
800	ON	OFF	ON	ON
1600	OFF	OFF	ON	ON
3200	ON	ON	OFF	ON
6400	OFF	ON	OFF	ON
12800	ON	OFF	OFF	ON
25600	OFF	OFF	OFF	ON
1000	ON	ON	ON	OFF
2000	OFF	ON	ON	OFF
4000	ON	OFF	ON	OFF
5000	OFF	OFF	ON	OFF
8000	ON	ON	OFF	OFF
10000	OFF	ON	OFF	OFF
20000	ON	OFF	OFF	OFF
25000	OFF	OFF	OFF	OFF

PRIMOPAL

Bring Out the Best in Motion

Shanghai PrimoPal Precision Motor Co., Ltd.

Add: 3F, Bldg. B, No.745 East Zhuanxing Road, Shanghai 201108, China

Tel: +86 21 5018 7836 | **Fax**: +86 21 5017 9351

Website: www.primopal.com

Sale & Product Inquiries: sales@primopal.com

Proudct & Technical Support: support@primopal.com